Innovation, integrity and service


Zhejiang Hechuan Technology Co., Ltd. (Headquarters)

Address No.9,Fucai Road, Longyoui Industrial Zone, Quzhou City, Zhejiang Province, P.R. China

Service hotline 400-012-6969

www.facebook.com/HCFAtechnologyFB

www.linkedin.com/company/hcfa-technology

www.youtube.com/channel/UCISFCC7thSFfPUQsdXre9yg


HCFA Official Wechat

HCFA Application Wechat

# SERVO PRODUCTS Catalogue

www.hcfa.cn

智慧禾川 梦想未来


The 1st Edition in Dec. 2020

# INDEX



# “To be the most valuable industrial automation solutions provider”

### Machine automation area

IPC/PAC/PLC+Servo drive+Servo motor+Inverter, providing a complete set of machine automation solutions, widely used in electronic non-standard, lithium battery, photovoltaic power and other fields

### Factory automation area

IPC/PAC/PLC+ Robot+ Visual system + Servo drive+Servo motor+Inverter, Provide the factory automation solution, applied in the electronic production, and motor production etc.

### Intelligent manufacturing area

Info.+Control+Mechatronics+Servo drive+Sensor Provide overall flexible solutions in the field of intelligent manufacturing, covering information layer -> control layer -> driver layer -> sensing/ execution layer

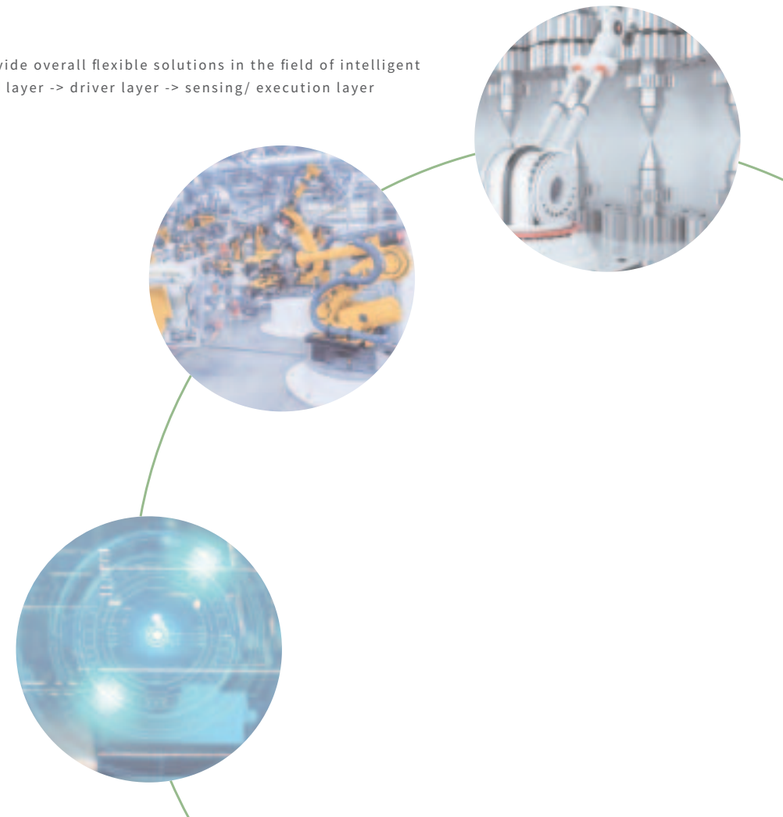

Servo Drives

X2E / X3E


## Model name identification

SV - X3E A 075 A A 2 - 00 000

**Series name**

| | |
|---|---|
| X2 series | X3 series |
| X6 series | Y5 series |

**Type**

| | |
|---|---|
| A | Standard type |
| B | EtherCAT type |
| N | CANOpen type |

**Power specifications**

| | |
|---|---|
| 005 | 50W |
| 010 | 100W |
| 020 | 200W |
| 040 | 400W |
| 075 | 750W |
| 100 | 1000W |
| 150 | 1500W |
| 200 | 2000W |
| 250 | 2500W |

**Voltage specifications**

| | |
|---|---|
| A | AC220V |
| T | AC380V |
| B | AC110V |
| L | DC48V |
| M | DC24V |

**Control power**

| | |
|---|---|
| A | AC power |
| D | 24V power |

**Software customized mark**

| | |
|---|---|
| 000 | N/A |

**Hardware customized mark**

| | |
|---|---|
| 00 | N/A |
| AO | Analog output |
| PG | Encoder |
| Q | Full-closed |

**Products updates no.**





# HTESERVO

## Contents

**X3E series servo drive**

**X2E series servo drive**

- High-performance vector control
- Real-time auto-tuning
- High-speed real-timebus control
- PMSM electromagnetic analysis technology

## SV-X3E Series Servo Drive

### Rated power

- 50W~750W Single-phase 220V
- 1.0KW~2.5KW Three-phase 220V

### Features

**▲ High-response**
Speed loop bandwidth 1.2kHz, FPGA processing, Current loop bandwidth 2.5kHz

**▲ High communication compatibility**
Support standard EtherCAT, CANopen, Modbus communication

**▲ Flexible motor matching**
Compatible with X1/X2/X3/X6 series motor, support 17-bit and 23-bit magnetic and optical encoders

**▲ Various functions**
Potential energy compensation, interruption positioning, instantaneous power-failureprotection, dynamic braking

**▲ Various non-standard customized functions**
Gantry synchronization, full-closed, electronic cam, torque positioning (screw locked)

**▲ High ease of use**
Built-in multi-stage customized position control, notch adjustment an dautomaticresonance suppression function, stiffness adjustment, Inertia online identification

## Wiring Diagram for X3E Series

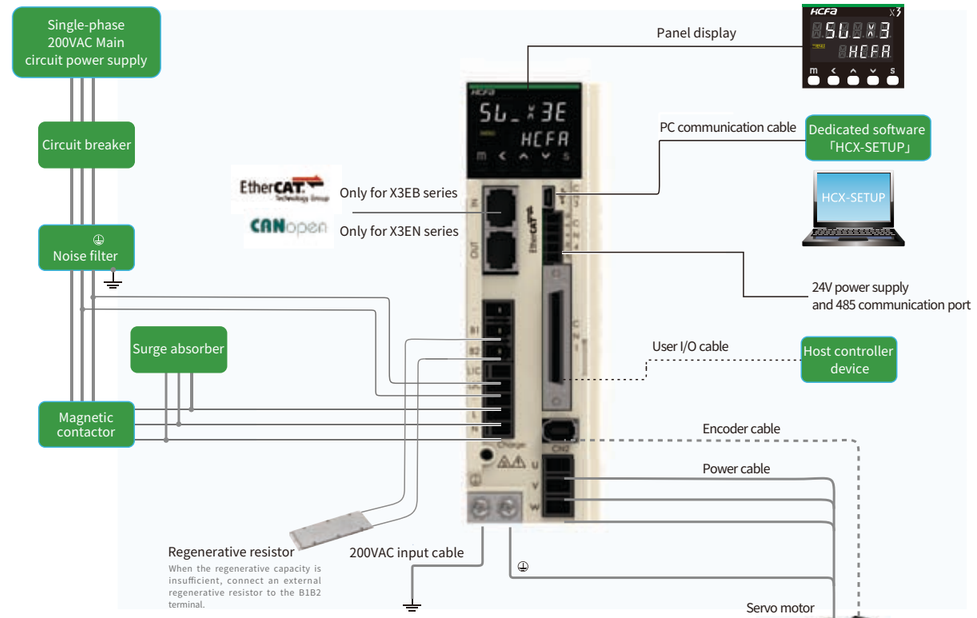


### Points for Correct Wiring

**Main points of wiring**

※Control circuit power supply and main circuit power should be wiring from the same 200VAC main circuit power supply.
※A twisted shielded cable should be used when I/O communication cable is more than 50cm.
※The encoder cable should be less than 20m when wiring.

**WARNING**

※ Please note that there is high voltage in the solid line of wiring diagram when wiring and using.
※ The dotted lines in the wiring diagram indicates non-dangerous voltage circuit.

## Connector description for servo drive and motor

| Items | Description |
|---|---|
| Peripheral devices | Conform to European EC Directive. Select the device which meets corresponding standards and install them in accordance with Figure 4.1.1 System Wiring diagram |
| Installation environment | Install the drive in environment conforming to Pollution degree 2 or 1 of IEC60664-1. |
| Power supply 1: 200~230 VAC (main and control circuit) | This product can be used under the conditions that conform to IEC60664-1 and overvoltage category Ⅱ. |
| Power supply 2: 24VDC<br>· I/O power supply<br>· Power supply for brake release | 24VDC external power supply should use SELV power supply (※) and be less than 150W. This is the CE corresponding conditions.<br>※SELV: safety extra low voltage (Reinforced insulation is needed for safety extra low voltage, non-dangerous voltage and dangerous voltage.) |
| Wiring | Please use withstand voltage cables which are equivalent to AWG18/600V or AWG14/600V for motor power cable, encoder cable, AC220V input cable, FG cable and main circuit power distribution cable under multi-axis drive structure respectively when drives are less than 750W or more than 1kW. |
| Circuit breaker | Switch off the power supply to protect power cord when overcurrent occurs.<br>Make sure to use the breaker between power supply and interference filter that conforms to IEC specification and UL recognition in accordance with the User manual. Please use the breaker with leakage function recommended by HCFA in order to meet EMC standards. |
| Noise filter | To prevent the outside interference from power cables please use the interference filter recommended by HCFA in order to meet EMC standards. |
| Magnetic contactor | Switch main power supply (ON/OFF). And use it after installing a surge absorber. |
| Surge absorber | Please use the surge absorber recommended by HCFA. |
| Interference filter for signal cable / ferrite core | Please use the interference filter recommended by HCFA in order to meet EMC standards. |
| Regenerative resistor | This product is not equipped with regenerative resistor. The external regenerative resistor is necessary when the internal capacitor cannot absorb more regenerative power and regenerative voltage alarm is ON. For details, refer to 1.4 Model selection of external regenerative resistor. Use a built-in thermostat and set overheat protect circuit. |
| Grounding | This product belongs to Class 1 and need grounding protection.<br>Grounding should be executed for the case and cabinet that conforms to EMC.<br>The following symbol indicates the protection grounding terminal? ⏚ |

## Terminal descriptions for servo drive

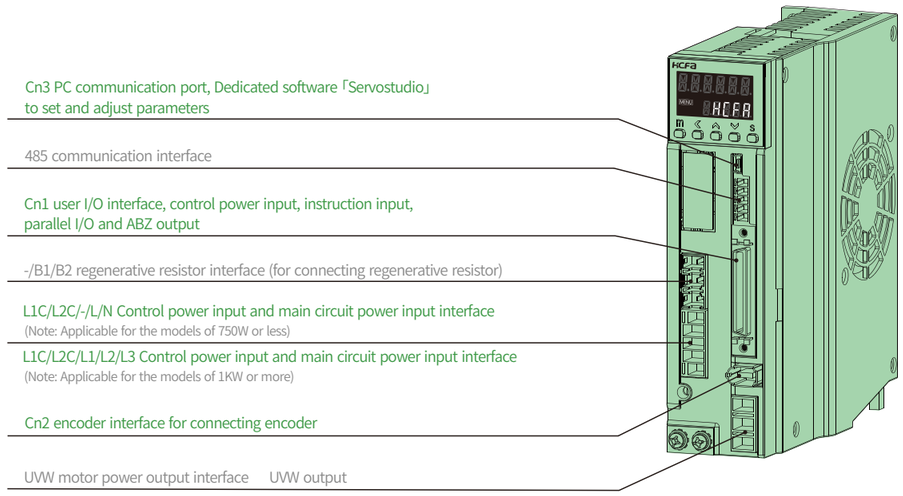


## Terminal arrangement for the drive

| Models | For 750W or less | | | | For 1KW or more | | | |
|---|---|---|---|---|---|---|---|---|
| Name | Symbol | Pin No. | Signal name | Contents | Symbol | Pin No. | Signal name | Contents |
| Regenerative resistor | B1/B2/ | 2 | B1 | P interface of regenerative resistor | B1/B2/L1C | 2 | B1 | P interface of regenerative resistor |
| | | 3 | B2 | N interface of regenerative resistor | /L2C/L1/L2/L3 | 3 | B2 | N interface of regenerative resistor |
| AC power input | L1C/L2C | 1 | L1C | AC power input | B1/B2/L1C | 1 | L1C | AC power |
| | /L/N | 2 | L2C | | /L2C/L1/L2/L3 | 2 | L2C | input |
| Single-phase 200VAC input | L1C/L2C | 4 | Prinary-power1 | L | | | | |
| | /L/N | 5 | Prinary-power2 | N | | | | |
| Three-phase 200VAC input | | | | | B1/B2/L1C | 3 | Prinary-power1 | L1 |
| | | | | | /L2C/L1/ | 4 | Prinary-power2 | L2 |
| | | | | | L2/L3 | 5 | Prinary-power3 | L2(Do not connect it when single-phase used) |
| Motor power output | U/V/W | 1 | U | Motor power U phase output | U/V/W | 1 | U | Motor power U phase output |
| | | 2 | V | Motor power V phase output | | 2 | V | Motor power V phase output |
| | | 3 | W | Motor power W phase output | | 3 | W | Motor power W phase output |
| Encoder | CN2 | 1 | VCC | Encoder power supply 5V output | CN2 | 1 | VCC | Encoder power supply 5V output |
| | | 2 | GND | Signal grounding | | 2 | GND | Signal grounding |
| | | 3 | NC | - | | 3 | NC | - |
| | | 4 | NC | - | | 4 | NC | - |
| | | 5 | +D | Encoder signal: data input/output | | 5 | +D | Encoder signal: data input/output |
| | | 6 | -D | Encoder signal: data input/output | | 6 | -D | Encoder signal: data input/output |
| | | - | FG | Connect SHIELD to the connector housing | | - | FG | Connect SHIELD to the connector housing |
| PC communication | CN3 | 1 | VBUS | USB data | CN3 | 1 | VBUS | USB data |
| | | 2 | D- | USB data- | | 2 | D- | USB data- |
| | | 3 | D+ | USB data+ | | 3 | D+ | USB data+ |
| | | 4 | NC | - | | 4 | NC | - |
| | | 5 | GND | USB signal grounding | | 5 | GND | USB signal grounding |
| Communication | CN4 | | | | CN4 | | | |
| | | | | | | | | |
| | | 3 | 485 | 485 signal from upper controller | | 3 | 485 | 485 signal from upper controller |
| | | 4 | 485 | 485 signal from upper controller | | 4 | 485 | /485 signal from upper controller |
| | | 5 | SG | Communication signal grounding | | 5 | SG | Communication signal grounding |
| External fan | CN14 | 1 | 24V | 24V for external fan | CN14 | 1 | 24V | 24V for external fan |
| | | 2 | G24 | GND for external fan | | 2 | G24 | GND for external fan |
| | | 3 | NC | - | | 3 | NC | - |
| I/O control terminal | CN1 | | | Refer to Section 4.5 Wiring description of I/O control terminal (CN1) | CN1 | Refer to Section 4.5 Wiring description of I/O control terminal (CN1) | | |







## Motor connector and pins arrangement (750W or below)

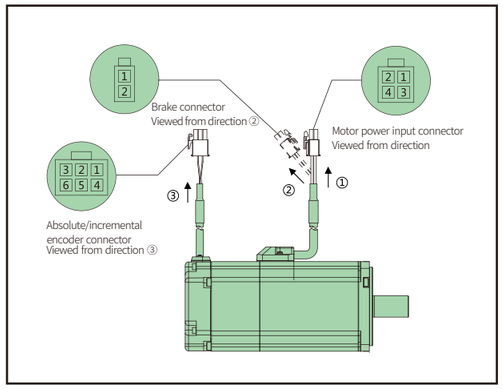


## Motor connector and pins arrangement (1kW or above)

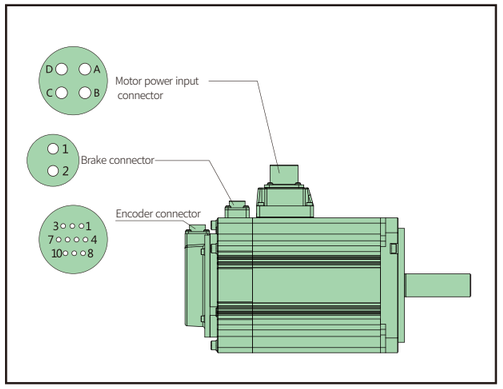


## Cable list (For motor of 750W or below)

| Name | Cable |
|---|---|
| Motor power input | AWG18 |
| Brake(For motor with brake) | AWG22 |
| Encoder (Incremental) | AWG24 |
| Encoder (Absolute) | AWG24 |

## Cable list (for motor of 1kW or above)

| Name | Cable |
|---|---|
| Motor power input | AWG15 |
| Brake (For motor with brake) | AWG18 |
| Encoder (Incremental) | AWG24 |
| Encoder (Absolute) | AWG24 |

## For motor of 750W or below

| Name | Pin No. | Signal name | Contents | Wire color |
|---|---|---|---|---|
| Motor power input | 1 | U | Motor power U phase | Red |
| | 2 | V | Motor power V phase | White |
| | 3 | W | Motor power W phase | Black |
| | 4 | FG | Motor housing grounding | Green |
| | 1 | BRK+ | Brake power supply 24VDC | Yellow(orange) |
| Brake※1 | 2 | BRK- | Brake power supply GND | Blue(brown) |
| | 1 | — | NC | — |
| Encoder | 2 | +D | Serial communication data+data | White(red dotted) |
| | 3 | -D | Serial communication data-data | White (black dotted) |
| | 4 | VCC | Encoder power supply 5V | Orange (red dotted) |
| | 5 | GND | Signal ground | Orange (black dotted) |
| | 6 | SHIELD | Shielded wires | Black |

※1 For motor with brake.

## For motor of 1KW or aboue

| Name | Pin No. | Signalname | Contents | Wire color |
|---|---|---|---|---|
| Motor power input | 1 | U | Motor power U phase | Red |
| | 2 | V | Motor power V phase | White |
| | 3 | W | Motor power W phase | Black |
| | 4 | FG | Motor housing grounding | Green |
| Brake | 1 | BRK+ | Brake power supply 24VDC | Yellow(orange) |
| | 2 | BRK- | Brake power supply GND | Blue(brown) |
| Encoder (incremental) | 1 | — | NC | — |
| | 2 | +D | Serial communication data+data | White(red dotted) |
| | 3 | -D | Serial communication data-data | White (black dotted) |
| | 4 | VCC | Encoder power supply 5V output | Orange (red dotted) |
| | 5 | GND | Signal ground | Orange (black dotted) |
| | 6 | SHIELD | Shielded wires | Black |
| Encoder (Absolute) | 1 | BAT | External battery (※2) | Yellow(red dotted) |
| | 2 | +D | Serial communication +data | White(red dotted) |
| | 3 | -D | Serial communication -data | White(black dotted) |
| | 4 | VCC | Encoder power supply 5V output | Orange(red dotted) |
| | 5 | GND | Signal ground | Orange(black dotted) |
| | 6 | SHIELD | Shielded wires | Black |

※1 For motor with brake.
※2 External capacitor and battery are taking GND as the reference potential.
※3 Internal connection (IC) has been connected internally.
Do not connect it with any other wires.

## RS-485 communication wirings

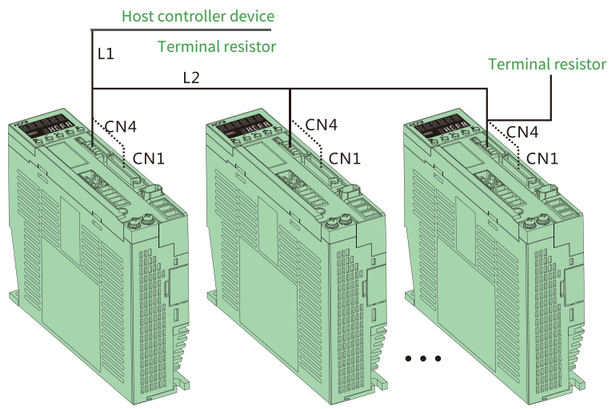


Figure 4.4.1 Multi-station connection example

L1=5m (max): cables between upper controller and servo drive should be less than 5m.
L2=250mm (max): cables between each servo drive should be less than 250mm.
Terminal resistor: Connect the terminal resistor between the Pin A & B of CN4 or Pin 43 & 44 of CN1 at the last drive and host controller (220Ω).

## I/O control terminal (CN1) descriptions

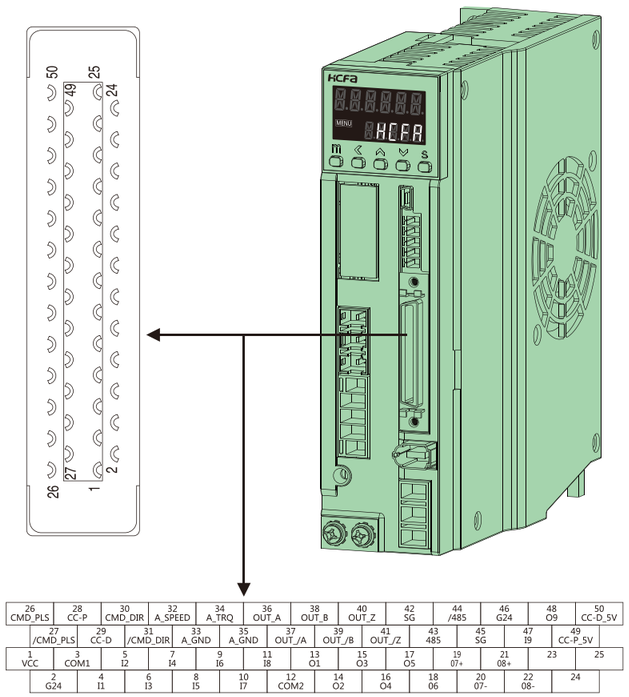


| | | | | | | | | | | | | | |
|---|---|---|---|---|---|---|---|---|---|---|---|---|---|
| 26 CMD_PLS | 28 CC-P | 30 CMD_DIR | 32 A_SPEED | 34 A_TRQ | 36 OUT_A | 38 OUT_B | 40 OUT_Z | 42 SG | 44 /485 | 46 G24 | 48 O9 | 50 CC-D_5V | |
| 27 /CMD_PLS | 29 CC-D | 31 /CMD_DIR | 33 A_GND | 35 A_GND | 37 OUT_/A | 39 OUT_/B | 41 OUT_/Z | 43 485 | 45 SG | 47 I9 | 49 CC-P_5V | | |
| 1 VCC | 3 COM1 | 5 I2 | 7 I4 | 9 I6 | 11 I8 | 13 O1 | 15 O3 | 17 O5 | 19 07+ | 21 08+ | 23 | 25 | |
| 2 G24 | 4 I1 | 6 I3 | 8 I5 | 10 I7 | 12 COM2 | 14 O2 | 16 O4 | 18 06 | 20 07- | 22 08- | 24 | | |

Terminal arrangements









## Terminal description

| Name | Pin No. | Signal name | Contents |
|---|---|---|---|
| User I/O control<br>24V power supply output<br>Parallel I/O<br>Pulse train<br>Instruction input<br>ABZ output | 1 | 24V | Drive power supply 24V output |
| | 2 | G24V | Drive power supply GND |
| | 3 | COM+ | I/O power supply input |
| | 4 | I1 | Digital signal input |
| | 5 | I2 | Digital signal input |
| | 6 | I3 | Digital signal input |
| | 7 | I4 | Digital signal input |
| | 8 | I5 | Digital signal input |
| | 9 | I6 | Digital signal input |
| | 10 | I7 | Digital signal input |
| | 11 | I8 | Digital signal input |
| | 12 | COM- | I/O power supply GND |
| | 13 | O1 | Digital signal output |
| | 14 | O2 | Digital signal output |
| | 15 | O3 | Digital signal output |
| | 16 | O4 | Digital signal output |
| | 17 | O5 | Digital signal output |
| | 18 | O6 | Digital signal output |
| | 19 | O7+ | Digital signal output + |
| | 20 | O7- | Digital signal output - |
| | 21 | O8+ | Digital signal output + |
| | 22 | O8- | Digital signal output - |
| | 23 | — | |
| | 24 | HPULS+ | High-speed pulse instruction input HPULS+ |
| | 25 | HPULS- | High-speed pulse instruction input HPULS- |
| | 26 | CMDPLS_ | Pulse instruction input PLS+ |
| | 27 | / PLS_CMD | Pulse instruction input PLS- |
| | 28 | CC-P | Open-collector Pulse instruction input PLS power(24V) |
| | 29 | CC-D | Open-collector Pulse instruction input DIR power(24V) |
| | 30 | CMDDIR_ | Pulse instruction input DIR+ |
| | 31 | / DIR_CMD | Pulse instruction input DIR- |
| | 32 | AI1 | Analog input |
| | 33 | GND | Analog reference GND |
| | 34 | AI2 | Analog input |
| | 35 | GND | Analog reference GND |
| | 36 | OUTA | Pulse output A |
| | 37 | / OUTA | Pulse output /A |
| | 38 | OUTB | Pulse output B |
| | 39 | / OUTB | Pulse output /B |
| | 40 | OUTZ | Pulse output Z |
| | 41 | / OUTZ | Pulse output /Z |
| | 42 | GND | Pulse output reference GND |
| | 43 | HSIGN- | High-speed pulse instruction input HSIGN- |
| | 44 | HSIGN+ | High-speed pulse instruction input HSIGN+ |
| | 45 | GND | RS-485 reference GND |
| | 46 | — | |
| | 47 | I9 | Digital signal input |
| | 48 | O9 | Digital signal output |
| | 49 | CC-P_5V | Open-collector Pulse instruction input PLS power (5V) |
| | 50 | CC-D_5V | Open-collector Pulse instruction input DIR power (5V) |

## Pulse instruction differential input

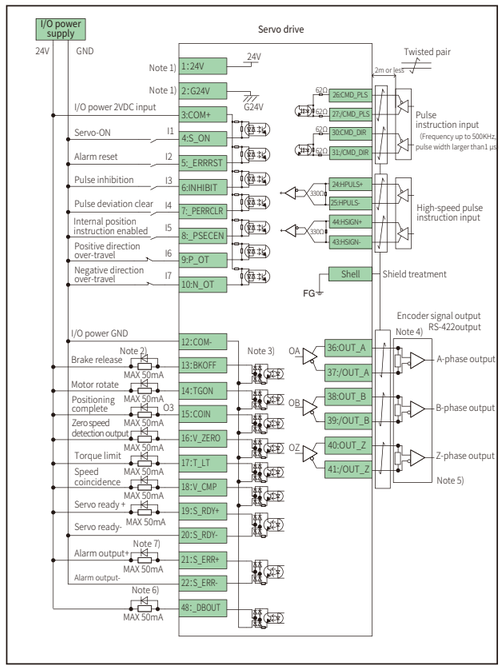


## Pulse instruction 24V open-collector input

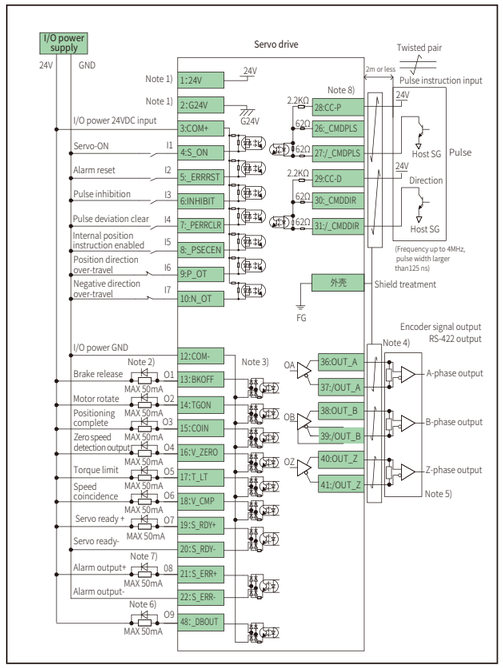


## Pulse instruction 5V open-collector input

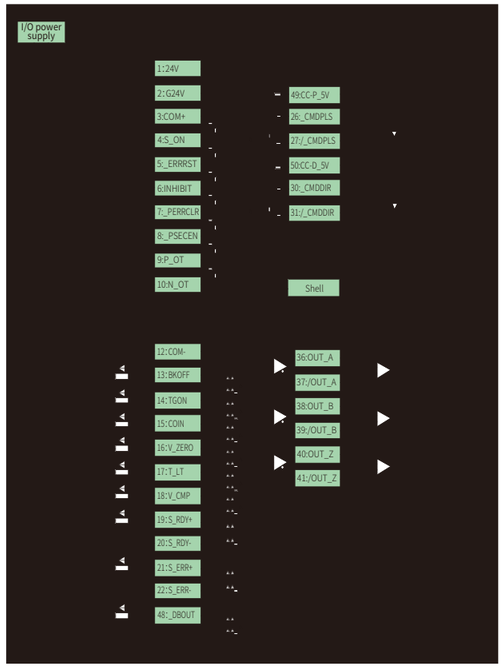


## Analog instruction input

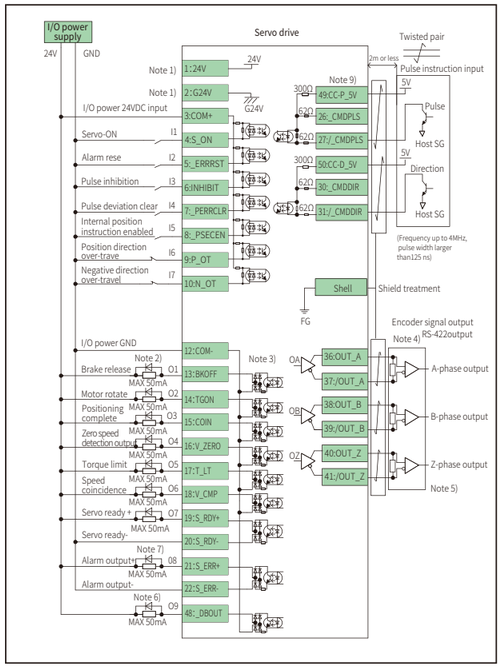


Note 1: Control power output (24V, G24V) can be used as I/O power (COM+, COM-). But the maximum output current is 150mA, and when driving the output such as relay and brake, please use external independent power.

Note 2: Please connect protective circuit (diode) when driving load with inductive component such as relay.

Note 3: Output pins can output high level or low level, based on different wiring mode. So perform the wiring according to actual needs. Make wiring as follows:

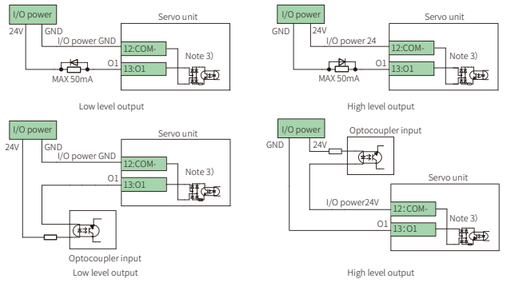


Note 4: The differential pulse output and 485 communication circuits need to connect the terminal resistor.

Note 5: Connect the signal ground on the host control device of output signal of the encoder. The connection of signal ground and power supply GND may cause malfunction.

Note 6: O9 does not configure any functions by default, but can be used as the DO output and the OC output of Z-pulse. In this case, do not configure any DO function to O9 that is P04. 29 is set to 0, and P04. 54 is set to 1.

Note 7: The default function of O8 is the fault output, and the default output logic state is normally closed output. The output logic state can be set by function code. For details, refer to Section 7.2 Parameters description – Group P04 Digital input/output.

Note 8: Two cases according to the pulse generation mode: NPN and PNP, as shown below.

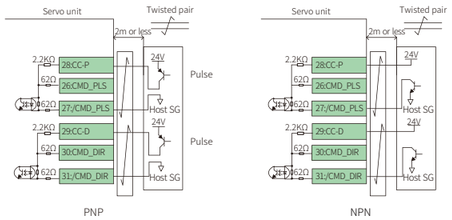


Note 9: Two cases according to the pulse generation mode: NPN and PNP, as shown below.

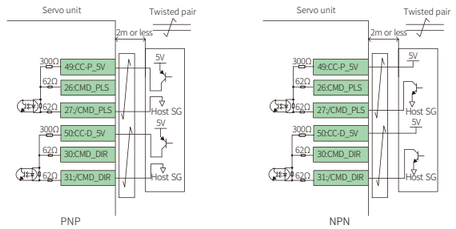


※ DI function can be flexibly configured by function codes. DI is valid by default when connected and the logic can be changed by function codes.

※ DO function can be flexibly configured by function codes. DO is valid by default when connected and the logic can be changed by function codes.

※ Parameter P06.41 is for the digital filtering of open-collector and general pulse input, P06.49 is for the digital filtering of high-speed pulse input.



# SV-X2E Series Servo Drive

## Rated power

- 50W~750W Single-phase220V
- 1.0KW~2.5KW Three-phase220V

## Product features

▲ **High-response**
Speed loop bandwidth 1kHz, Current loop bandwidth 2kHz

▲ **High communication compatibility**
Support CANopen, 485 communication

▲ **Flexible motor matching**
Compatible with X1/X2/X3/X6 series motor, support 17-bit magnetic encoders

▲ **Various functions**
Potential energy compensation, interruption positioning, instantaneous pow
er-failure protection, dynamic braking

▲ **High ease of use**
Built-in multi-stage customized position control, notch adjustment and E
jitter suppression rigidity adjustment, Inertia online identification

## Wiring Diagram for X2E Series

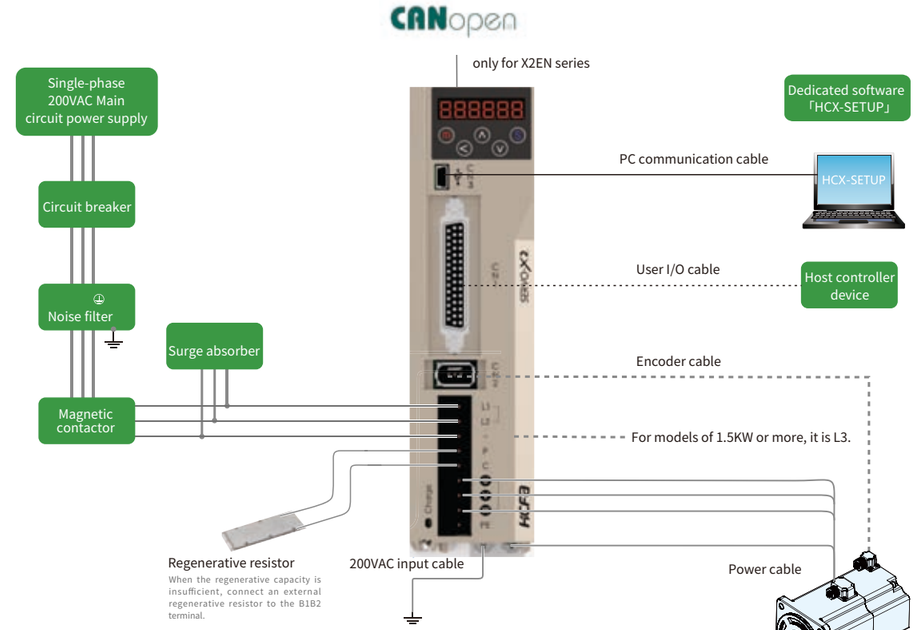


### Points for Correct Wiring

Main points of wiring

※A twisted shielded cable should be used when I/O communication cable is more than 50cm.
※The encoder cable should be less than 20m when wiring.

### WARNING

※Please note that there is high voltage in the solid line of wiring diagram when wiring and using.
※The dotted lines in the wiring diagram indicates non-dangerous voltage circuit.

## Connector description for servo drive and motor

| Items | Description |
|---|---|
| Peripheral devices | Conform to European EC Directive. Select the device which meets corresponding standards and install them in accordance with Figure 4.1.1 System Wiring diagram |
| Installation environment | Install the drive in environment conforming to Pollution degree 2 or 1 of IEC60664-1. |
| Power supply 1: 200~230 VAC (main and control circuit) | This product can be used under the conditions that conform to IEC60664-1 and overvoltage category Ⅱ. |
| Power supply 2: 24VDC<br>· I/O power supply<br>· Power supply for brake release | 24VDC external power supply should use SELV power supply (※) and be less than 150W. This is the CE corresponding conditions.<br>※SELV: safety extra low voltage (Reinforced insulation is needed for safety extra low voltage, non-dangerous voltage and dangerous voltage.) |
| Wiring | Please use withstand voltage cables which are equivalent to AWG18/600V or AWG14/600V for motor power cable, encoder cable, AC220V input cable, FG cable and main circuit power distribution cable under multi-axis drive structure respectively when drives are less than 750W or more than 1kW. |
| Circuit breaker | Switch off the power supply to protect power cord when overcurrent occurs.<br>Make sure to use the breaker between power supply and interference filter that conforms to IEC specification and UL recognition in accordance with the User manual. Please use the breaker with leakage function recommended by HCFA in order to meet EMC standards. |
| Noise filter | To prevent the outside interference from power cables please use the interference filter recommended by HCFA in order to meet EMC standards. |
| Magnetic contactor | Switch main power supply (ON/OFF). And use it after installing a surge absorber. |
| Surge absorber | Please use the surge absorber recommended by HCFA. |
| Interference filter for signal cable / ferrite core | Please use the interference filter recommended by HCFA in order to meet EMC standards. |
| Regenerative resistor | This product is not equipped with regenerative resistor. The external regenerative resistor is necessary when the internal capacitor cannot absorb more regenerative power and regenerative voltage alarm is ON. For details, refer to 1.4 Model selection of external regenerative resistor. Use a built-in thermostat and set overheat protect circuit. |
| Grounding | This product belongs to Class 1 and need grounding protection.<br>Grounding should be executed for the case and cabinet that conforms to EMC.<br>The following symbol indicates the protection grounding terminal? ⏚ |

## Terminal descriptions for servo drive

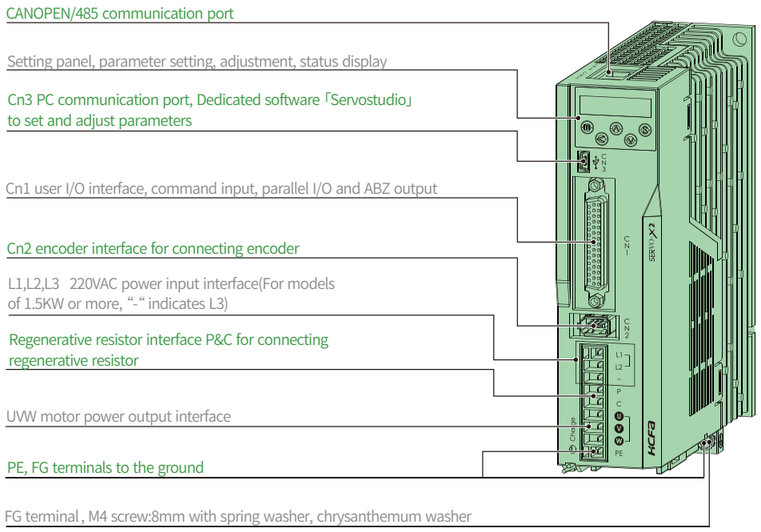


## Terminal arrangement of drive

| Name | Symbol | Pin No. | Signal name | Contents |
|---|---|---|---|---|
| Regenerative resistor | P/C | 4 | P | P interface of regenerative resistor |
| | | 5 | C | N interface of regenerative resistor |
| Single-phase /Three-phase 200VAC input | L1/L2/L3 | 1 | Primary— Power1 | L1 |
| | | 2 | Primary— Power2 | L2 |
| | | 3 | Primary— Power3 | For models or 1KW or less, it is "-". For models or 1.5KW or more, it is "L3". |
| Motor power output | U/V/W | 1 | U | Motor power U phase output |
| | | 2 | V | Motor power V phase output |
| | | 3 | W | Motor power W phase output |
| Encoder | CN2 | 1 | VCC | Encoder power supply 5V output |
| | | 2 | GND | Signal grounding |
| | | 3 | NC | — |
| | | 4 | NC | — |
| | | 5 | +D | Encoder signal: data input/output |
| | | 6 | -D | Encoder signal: data input/output |
| | | - | FG | Connect SHIELD to the connector housing |
| PC communication | CN3 | 1 | VBUS | USB power |
| | | 2 | D- | USB data- |
| | | 3 | D+ | USB data+ |
| | | 4 | NC | — |
| | | 5 | GND | USB signal grounding |
| CANOPEN/485 communication interface | Cn4/Cn5 | 1 | CANH | CAN communication port |
| | | 2 | CANL | |
| | | 3 | GND-CAN | CAN communication grounding |
| | | 4 | 485 | RS communication port |
| | | 5 | /485 | |
| | | 6 | — | — |
| | | 7 | — | — |
| | | 8 | — | — |
| User I/O | CN1 | Refer to Section 4.5 Wiring description of I/O control terminal (CN1) | | |







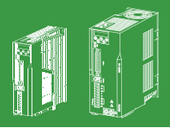



## Motor connector and pins arrangement (50W~750W)

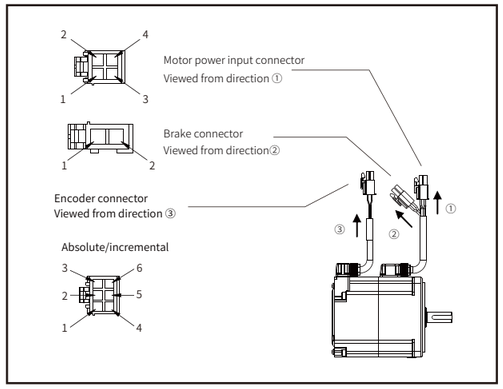


## Motor connector and pins arrangement (1KW or more)

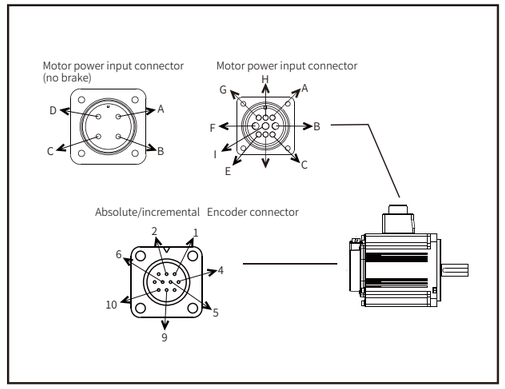


## Cable list (For motor of 750W or below)

| Name | Cable |
|---|---|
| Motor power input | AWG21 |
| Brake (For motor with brake) | AWG21 |
| Encoder (Incremental) | AWG24 |
| Encoder (Absolute) | AWG24 |

## Cable list (For motor of 1KW or more)

| Name | Cable |
|---|---|
| Motor power input | AWG19 |
| Brake (For motor with brake) | AWG21 |
| Encoder (Incremental) | AWG24 |
| Encoder (Absolute) | AWG24 |

## For motor of 750W or below

| Name | Pin No. | Signal name | Contents | Wire color |
|---|---|---|---|---|
| Motor power input | 1 | U | Motor power U phase output | Red |
| | 2 | V | Motor power V phase output | White |
| | 3 | W | Motor power W phase output | Black |
| | 4 | FG | Motor housing grounding | Green |
| Brake (※1) | 1 | BRK+ | Brake power supply 24VDC | Yellow(orange) |
| | 2 | BRK— | Brake power supply GND | Blue(brown) |
| Encoder (incremental) | 1 | - | NC | - |
| | 2 | +D | Serial communication data +data | White(red dotted) |
| | 3 | -D | Serial communication data -data | White(black dotted) |
| | 4 | VCC | Encoder power supply 5V | Orange(red dotted) |
| | 5 | GND | Signal ground | Orange(black dotted) |
| | 6 | SHIELD | Shielded wires | Black |
| Encoder (absolute) | 1 | BAT | External battery (※2) | Yellow(red dotted) |
| | 2 | +D | Serial communication data +data | White(red dotted) |
| | 3 | -D | Serial communication data -data | White(black dotted) |
| | 4 | VCC | Encoder power supply 5V | Orange(red dotted) |
| | 5 | GND | Signal ground | Orange(black dotted) |
| | 6 | SHIELD | Shielded wires | Black |

※1 For motor with brake.
※2 External capacitor and battery are taking GND as the reference potential.

## For motor of 1KW or more

| Name | Pin No. | Signal name | Contents | Notes |
|---|---|---|---|---|
| Motor power input | A | - | NC | |
| | B | W | Motor power W phase output | |
| | C | - | NC | |
| | D | FG | Motor housing grounding | |
| | E | FG | | |
| | F | U | Motor power U phase output | |
| | G | BRK1 | Brake power supply 24VDC | |
| | H | BRK1 | Brake power supply GND | |
| | I | V | Motor power V phase output | |
| Power input (no brake) | A | U | Encoder power supply 5V output | |
| | B | V | Motor power V phase output | |
| | C | W | Motor power W phase output | |
| | D | FG | Motor housing grounding | |
| Encoder | 1 | VCC | Encoder power supply 5V output | |
| | 2 | GND | Signal ground | |
| | 3 | - | NC | |
| | 4 | BATT | External battery | |
| | 5 | +DO | Serial communication data +data | |
| | 6 | -DO | Serial communication data -data | |
| | 7 | - | NC | |
| | 8 | - | NC | |
| | 9 | BAT- | External battery- | |
| | 10 | FG | Motor housing grounding | |

※1 For motor with brake.
※2 External capacitor and battery are taking GND as the reference potential.

## RS-485 communication wirings

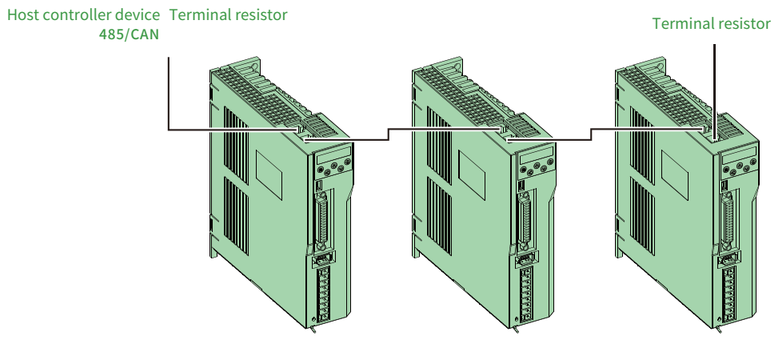


Multi-station connection example

L1=5m (max): cables between upper controller and servo drive should be less than 5m.
L2=250mm (max): cables between each servo drive should be less than 250mm.
Terminal resistor: Connect the terminal resistor to the network interface of the last drive and upper controller (120Ω).

## I/O control terminal (CN1) descriptions

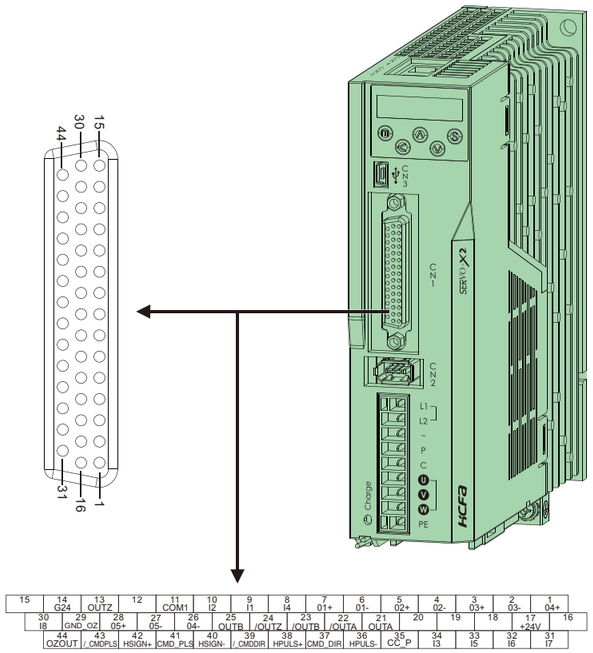


User control terminal







## Pins definition of communication connector

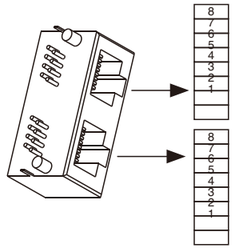

| Pin No. | Signal name | Description |
|---|---|---|
| 1 | CANH | CAN communication port |
| 2 | CANL | |
| 3 | GND-CAN | CAN communication grounding |
| 4 | 485 | Rs485 communication port |
| 5 | /485 | |
| 6 | / | / |
| 7 | / | / |
| 8 | / | / |

## Terminal description

| Name | Pin No. | Signal name | Contents |
|---|---|---|---|
| I/O control<br>24V power output<br>Parallel I/O<br>Pulse train<br>Command input<br>ABZ output | 1 | O4+ | Digital signal output |
| | 2 | O3- | Digital signal output |
| | 3 | O3+ | Digital signal output |
| | 4 | O2- | Digital signal output |
| | 5 | O2+ | Digital signal output |
| | 6 | O1- | Digital signal output |
| | 7 | O1+ | Digital signal output |
| | 8 | I4 | Digital signal input |
| | 9 | I1 | Digital signal input |
| | 10 | I2 | Digital signal input |
| | 11 | COM1 | I/O power input |
| | 12 | - | - |
| | 13 | OUTZ | Pulse output Z |
| | 14 | G24V | Drive power GND |
| | 15 | - | - |
| | 16 | - | - |
| | 17 | 24V | Drive power 24V output |
| | 18 | - | - |
| | 19 | - | - |
| | 20 | - | - |
| | 21 | OUTA | Pulse output A |
| | 22 | / OUTA | Pulse output /A |
| | 23 | / OUTB | Pulse output /B |
| | 24 | / OUTZ | Pulse output /Z |
| | 25 | OUTB | Pulse output B |
| | 26 | O4- | Digital signal output |
| | 27 | O5- | Digital signal output |
| | 28 | O5+ | Digital signal output |
| | 29 | GNDOZ_ | Open-collector output GND_OZ |
| | 30 | I8 | Digital signal input |
| | 31 | I7 | Digital signal input |
| | 32 | I6 | Digital signal input |
| | 33 | I5 | Digital signal input |
| | 34 | I3 | Digital signal input |
| | 35 | CC-P | Pulse and direction input common terminal 24V |
| | 36 | HPULS- | High-speed pulse instruction input HPULS- |
| | 37 | DIR_CMD | Direction instruction input DIR+ |
| | 38 | HPULS+ | High-speed pulse instruction input HPULS+ |
| | 39 | DIR_CMD/ | Direction instruction input DIR- |
| | 40 | HSIGN+ | High-speed pulse instruction input HSIGN+ |
| | 41 | CMDPLS_ | Pulse instruction input PLS+ |
| | 42 | HSIGN- | High-speed pulse instruction input HSIGN- |
| | 43 | / PLS_CMD | Pulse instruction input PLS- |
| | 44 | OZOUT | Open-collector output OZOUT |

## Pulse instruction differential input

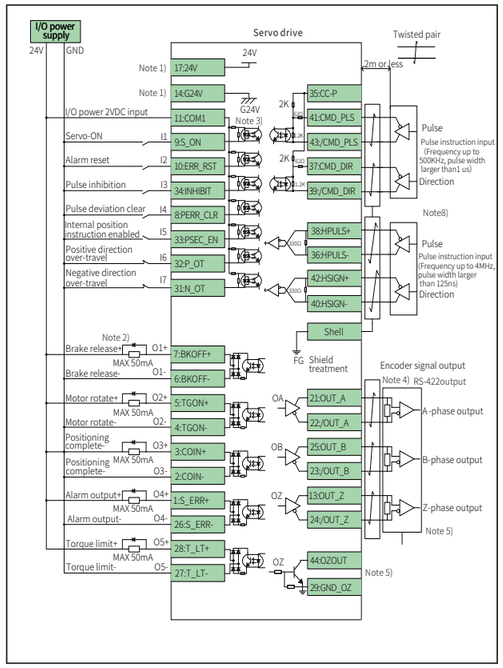


## Pulse instruction 24V open-collector input

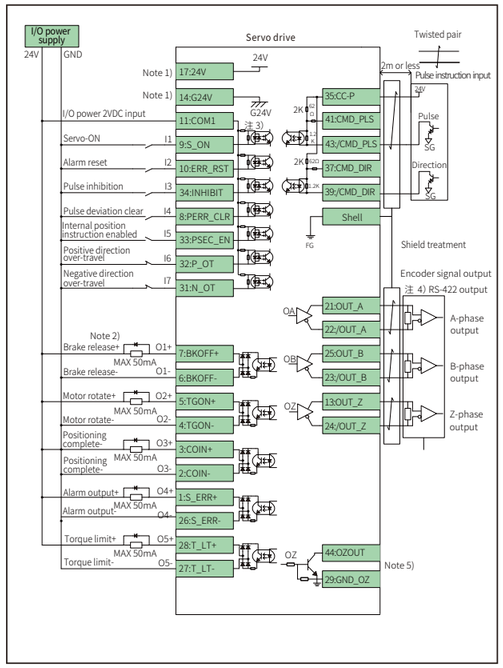


Note 1: Internal 24V power (24V, G24V) can be used as I/O power. But the maximum output current is 150mA, and when driving the output such as relay and brake, please use external independent power.
Note 2: Please connect protective circuit (diode) when driving load with inductive component such as relay.
Note 3: Output pins can output high level or low level, based on different wiring mode. So perform the wiring according to actual needs. Make wiring as follows:

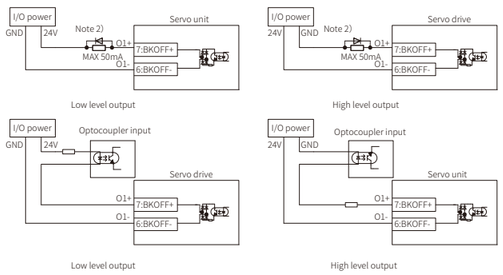


Note 4: The connecting terminal of differential pulse output signal, differential signal of 485 communication circuits and CANOPEN communication circuits need to be connected the terminal resistor.
Note 5: OZOUT is open-collector output and no manual configuration required.
Note 6: Two kinds of wiring according to the pulse generation mode: NPN and PNP, as shown below.

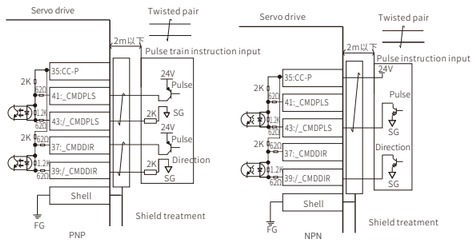


Note 7: If 5V open-collector circuit is required, be sure to connect an external 300Ω resistor.
Note 8:Please choose one according to the field demands between pulse instruction input and high-speed pulse input.
※ DI function can be flexibly configured by function codes. DI is valid by default when connected and the logic can be changed by function codes.
※ DO function can be flexibly configured by function codes. DO is valid by default when connected and the logic can be changed by function codes.
※ Adjust P06.41 for digital filtering of open-collector and general pulse input, and adjust P06.49 for digital filtering of high-speed pulse input.





## Servo drive Dimensional drawing

# External dimensions for X3E series

### For models of 200W or below

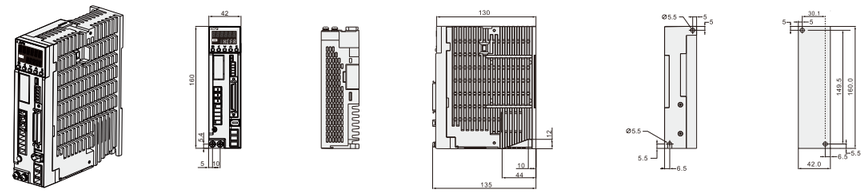

### 400W/750W

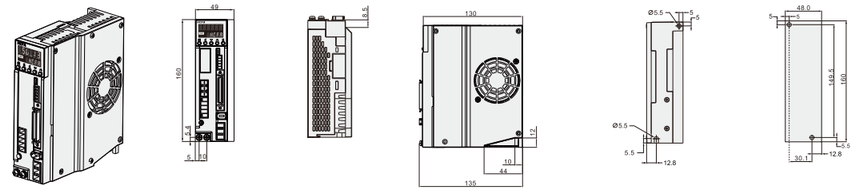

### 1.5KW/2KW/2.5KW

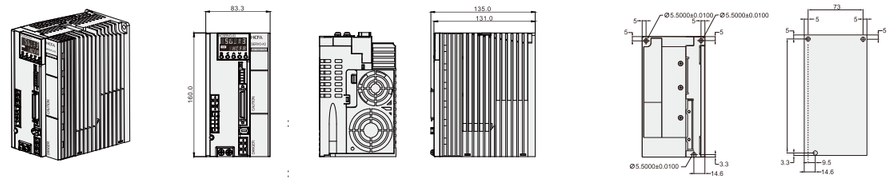

## Servo drive Dimensional drawing

# External dimensions for X2E series

### For models of 200W or below

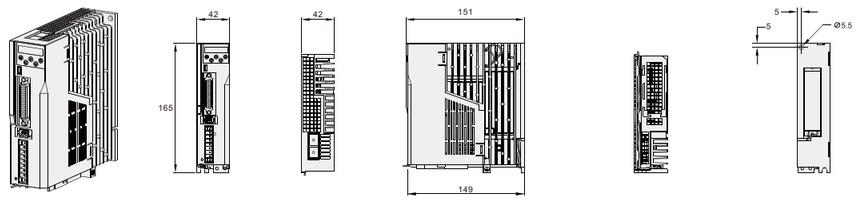


### 400W/750W/1KW

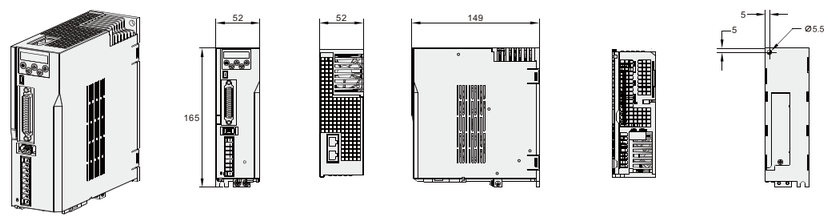


### 1.5KW/2KW/2.5KW

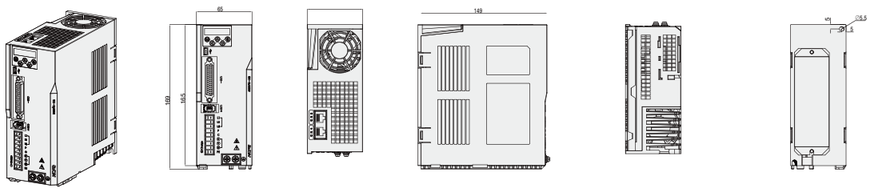





X2E

X3E

## X2E series servo drive specifications

| | |
|---|---|
| | Pulse input |
| Max input pulse frequency | Differential input: Up to 2Mpps, pulse width larger than 0.25us; Open-collector input: Up to 200Kpps, pulse width larger than 2.5us |
| Input pulse type | Differential input; open-collector |
| Input pulse form | Pulse+ direction, orthogonal phase difference (A-Phase + B-Phase), CW+CCW |
| Electronic gear | A/B A: 1~1073741824 B: 1~1073741824, Encoder resolution/10000000 < A/B <Encoder resolution/2.5 |
| Smoothing | Smoothing filter, FIR filter |
| Instantaneous speed observer | |
| | Speed control |
| Digital input | Servo ON, alarm reset, speed instruction negation,zero-speed clamp, internal speed control,external forward/reverse torque limit, emergency stop etc. |
| Digital output | Alarm state, servo ready, brake off, speed reached, torque in-limit, speed in-limit, zero-speed output, emergency stop etc. |
| Output pulse type | Encoder position pulse released in the following manner:A-/B-phase orthogonal phase difference pulse and Z-phase index pulse released in RS-422 differential format, Z-phase index pulse released through open collector |
| | Analog input |
| Speed input | Input voltage -10V to +10V (Maximum speed at ±10V) |
| Smoothing | Smoothing filter, FIR filter |
| Torque limit source | |
| Torque feedforward | |
| Internal speed instruction | 0 to 16-segment speed can be selected by DI terminal combination. |
| | Torque control |
| Digital input signals | Servo ON, alarm reset, reverse torque instruction, zero-speed clamp |
| Digital output signals | Alarm status, servo ready, brake release, torque limit, speed limit output |
| Torque input | Input voltage -10V to +10V (Maximum speed at ±10V) |
| Output pulse signal | Encoder position pulse released in the following manner: A-/B-phase orthogonal phase difference pulse and Z-phase index pulse released in RS-422 differential format, Z-phase index pulse released through open collector |
| Speed limit | Internal positive speed limit P03.27, Internal negative speed limit P03.28 |
| | Common |
| Speed monitoring | Provided |
| Vibration control | Provided |
| Adaptive notch filter | Provided |
| Encoder output division and multiplication | Provided |
| Adjustment/function setting | Adjust by Servostudio software of SV-X2E |
| Protective functions | Overvoltage, power supply error, overcurrent, overheat, overload, encoder error, overspeed, excessive position deviation, parameter error |
| Self-adaptive notch filter | |
| Internal position planning function | |

## X3E series servo drive specifications

| | |
|---|---|
| | Pulse input |
| Max input pulse frequency | Differential input: Up to 2Mpps, pulse width larger than 0.25us; Open-collector input: Up to 200Kpps, pulse width larger than 2.5us |
| Input pulse type | Differential input; open-collector |
| Input pulse form | Pulse+ direction, orthogonal phase difference (A-Phase + B-Phase), CW+CCW |
| Electronic gear | A/B A: 1~1073741824 B: 1~1073741824, Encoder resolution/10000000 < A/B <Encoder resolution/2.5 |
| Smoothing | Smoothing filter, FIR filter |
| Instantaneous speed observer | |
| | Speed control |
| Digital input | Servo ON, alarm reset, speed instruction negation, zero-speed clamp, internal speed control, external forward/reverse torque limit, emergency stop etc. |
| Digital output | Alarm state, servo ready, brake off, speed reached, torque in-limit, speed in-limit, speed reached, speed coincidence, motor rotation output, zero-speed output etc. |
| Output pulse type | Encoder position pulse released in the following manner:A-/B-phase orthogonal phase difference pulse and Z-phase index pulse released in RS-422 differential format, Z-phase index pulse released through open collector |
| | Analog input |
| Speed input | Input voltage -10V to +10V (Maximum speed at ±10V) |
| Smoothing | Smoothing filter, FIR filter |
| Torque limit instruction input | 1)Internal torque limit by P03.09, P03.10<br>2)External torque limit by P03.11, P03.12 enabled by P_CL/N_CL signals<br>3)TLMTP i.e. AI1 or AI2 as external forward/reverse torque limit<br>4) TLMTP as forward limit; TLMTN as reverse limit |
| Torque feedforward | 1)Internal torque feedforward<br>2) TFFD, AI1 or AI2 |
| Internal speed instruction | 0 to 16-segment speed can be selected by DI terminal combination. |
| | Torque control |
| Digital input signals | Servo ON, alarm reset, reverse torque instruction, zero-speed clamp |
| Digital output signals | Alarm status, servo ready, brake release, torque limit, speed limit output |
| Torque input | Input voltage -10V to +10V (Maximum speed at ±10V) |
| Output pulse signal | |
| Speed limit | 1: Internal positive speed limit P03.27, Internal negative speed limit P03.28 2: SPL i.e. AI input |
| | Common |
| Speed monitoring | Provided |
| Vibration control | |
| Adaptive notch filter | |
| Encoder output division and multiplication | |
| Adjustment/function setting | Adjust by Servostudio software of SV-X3E |
| Protective functions | Overvoltage, power supply error, overcurrent, overheat, overload, encoder error, overspeed, excessive position deviation, parameter error |
| Self-adaptive notch filter | |
| Internal position planning function | |

X2E

X3E

## X2E Series Servo drive Specifications

| Size & Weight | | | | | | |
|---|---|---|---|---|---|---|
| Models | 005 | 010 | 020 | 040 | 075 | 100 |
| Power | 50W | 100W | 200W | 400W | 750W | 1kW |
| W | 42 | 42 | 42 | 42 | 52 | 52 |
| H | 165 | 165 | 165 | 165 | 165 | 165 |
| D | 151 | 151 | 151 | 151 | 151 | 151 |
| KG | 1.7 | 1.7 | 1.8 | 1.8 | 2.1 | 2.2 |
| Input power | | | | | | |
| Frame A | Single-phase200～240V±10%50/60Hz | | | | | |
| Frame B | | | | | | |
| Control circuit power | | | | | | |
| Control method | Three-phase PWM inverting sine-wave | | | | | |
| Main circuit power | | | | | | |
| Control power | | | | | | |
| Rated current | 0.9A | 1.2A | 2A | 3A | 4.5A | 6A |
| Encoder feedback | Single-turn absolute 17-bit (multi-turn absolute encoder with battery) | | | | | |
| Temperature | | | | | | |
| Ambient temperature for use | Note 5, Note 6 | | | | | |
| Ambient temperature for storage | -20～65°C | | | | | |
| Humidity | | | | | | |
| Ambient humidity for use | 20～85%RH or less(Without condensation) | | | | | |
| Ambient humidity for storage | 20～85%RH or less(Without condensation) | | | | | |
| Atmosphere for use & storage | Indoors(Not subject to direct sunlight); free from corrosive gas, flammable gas, oil mist, or dust | | | | | |
| Altitude | 1000m or less above sea level | | | | | |
| Vibration | 5.8m/s2(0.6G) or less, 10～60Hz(No continuous operation allowed at frequency of resonance) | | | | | |
| Dielectric strength | 1 minute at 1500 VAC across the primary and FG | | | | | |
| Digital signal | | | | | | |
| Input | 8 inputs (24VDC, photo-coupler insulation) Switch by control mode | | | | | |
| Output | 5 outputs (24VDC, photo-coupler insulation,open-collector output) Switch by control mode | | | | | |
| Pulse signa | | | | | | |
| Input | 2 inputs (photo-coupler insulation, RS-422 differential, open-collector) | | | | | |
| Output | 4 outputs (A/B/Z-phase RS-422 differential, Z-phase open collector output) | | | | | |
| Analog signal input | | | | | | |
| Communication function | Connection with PC (with "Servostudio" software)<br>Host controller remote communication(1: n) | | | | | |
| Regeneration function | External regenerative resistor possible(Note 2) | | | | | |
| Dynamic brake | Not built-in | | | | | |
| Control mode | 7 control modes: Position control, speed control, torque control, position/speed control, position/torque control, speed/torque control, full-closed control (optional part needed) | | | | | |
| Position control mode | | | | | | |
| Digital input | Servo ON, alarm reset, deviation counter clear, positive/negative direction over-travel, internal command selection, homing start etc. | | | | | |
| Digital output | Alarm state, servo ready, brake release, torque in-limit output, position proximity, homing complete, position reached, motor rotation output, zero-speed output, etc. | | | | | |
| Operation mode | Point table, communication, manual pulse input | | | | | |
| Pulse output | | | | | | |
| Output pulse form | A-Phase, B-Phase: Differential output Z-Phase: Differential output or open collector output | | | | | |
| Division ratio | Arbitrary frequency division | | | | | |
| Output pulse | Encoder pulse or position Pulse instruction(can be set) | | | | | |
| Output pulse frequency | | | | | | |

## X3E Series Servo drive Specifications

| Size & Weight | | | | | | | | |
|---|---|---|---|---|---|---|---|---|
| Models | 005 | 010 | 020 | 040 | 075 | 100 | 150 | 200 |
| Power | 50W | 100W | 200W | 400W | 750W | 1kW | 1.5kW | 2kW |
| W | 42 | 42 | 42 | 49 | 49 | 84 | 84 | 84 |
| H | 160 | 160 | 160 | 160 | 160 | 160 | 160 | 160 |
| D | 130 | 130 | 130 | 130 | 130 | 130 | 130 | 130 |
| KG | 0.7 | 0.7 | 0.7 | 0.8 | 0.8 | 1.6 | 1.6 | 1.6 |
| Input power | | | | | | | | |
| Frame A | Single-phase200～240V±10%50/60Hz | | | | | | | |
| Frame B | Three-phase200～240V±10% 50/60Hz | | | | | | | |
| Control circuit power | Single-phas200～240V±10% 50/60Hz | | | | | | | |
| Control method | | | | | | | | |
| Main circuit power | | | | | | | | |
| Control power | | | | | | | | |
| Rated current | 0.9A | 1.2A | 2A | 3A | 4.5A | 6A | 10A | 12.5A |
| Encoder feedback | Single-turn absolute 17-bit (multi-turn absolute encoder with battery) | | | | | | | |
| Temperature | | | | | | | | |
| Ambient temperature for use | Note 5, Note 6 | | | | | | | |
| Ambient temperature for storage | -20～65°C | | | | | | | |
| Humidity | | | | | | | | |
| Ambient humidity for use | 20～85%RH or less(Without condensation) | | | | | | | |
| Ambient humidity for storage | 20～85%RH or less(Without condensation) | | | | | | | |
| Atmosphere for use & storage | Indoors(Not subject to direct sunlight); free from corrosive gas, flammable gas, oil mist, or dust | | | | | | | |
| Altitude | 1000m or less above sea level | | | | | | | |
| Vibration | 5.8m/s2(0.6G) or less, 10～60Hz(No continuous operation allowed at frequency of resonance) | | | | | | | |
| Dielectric strength | 1 minute at 1500 VAC across the primary and FG | | | | | | | |
| Digital signal | | | | | | | | |
| Input | 9 inputs (24VDC, photo-coupler insulation) Switch by control mode | | | | | | | |
| Output | 9 outputs (24VDC, photo-coupler insulation, open-collector output) Switch by control mode | | | | | | | |
| Pulse signa | | | | | | | | |
| Input | 2 inputs (photo-coupler insulation, RS-422 differential, open-collector) | | | | | | | |
| Output | 4 outputs (A/B/Z-phase RS-422 differential, Z-phase open collector output) | | | | | | | |
| Analog signal input | 2 inputs (±10V) Switch by control mode | | | | | | | |
| Communication function | Connection with PC (with "Servostudio" software)<br>Host controller remote communication(1: n) | | | | | | | |
| Regeneration function | External regenerative resistor possible(Note 2) | | | | | | | |
| Dynamic brake | Not built-in | | | | | | | |
| Control mode | 7 control modes: Position control, speed control, torque control, position/speed control, position/torque contrd, speed/torque control, full-closed control (optional part needed) | | | | | | | |
| Position control mode | | | | | | | | |
| Digital input | Servo ON, alarm reset, deviation counter clear, positive/negative direction over-travel, internal command selection, homing start etc. | | | | | | | |
| Digital output | Alarm state, servo ready, brake release, torque in-limit output, position proximity, homing complete, position reached, motor rotation output, zero-speed output, etc. | | | | | | | |
| Operation mode | Point table, communication, manual pulse input | | | | | | | |
| Pulse output | | | | | | | | |
| Output pulse form | A-Phase, B-Phase: Differential output Z-Phase: Differential output or open collector output | | | | | | | |
| Division ratio | Arbitrary frequency division | | | | | | | |
| Output pulse | Encoder pulse or position Pulse instruction(can be set) | | | | | | | |
| Output pulse frequency | | | | | | | | |

## MEMO



Servo Drives

**International raw material**

# High Quality

To ensure product performance and stability

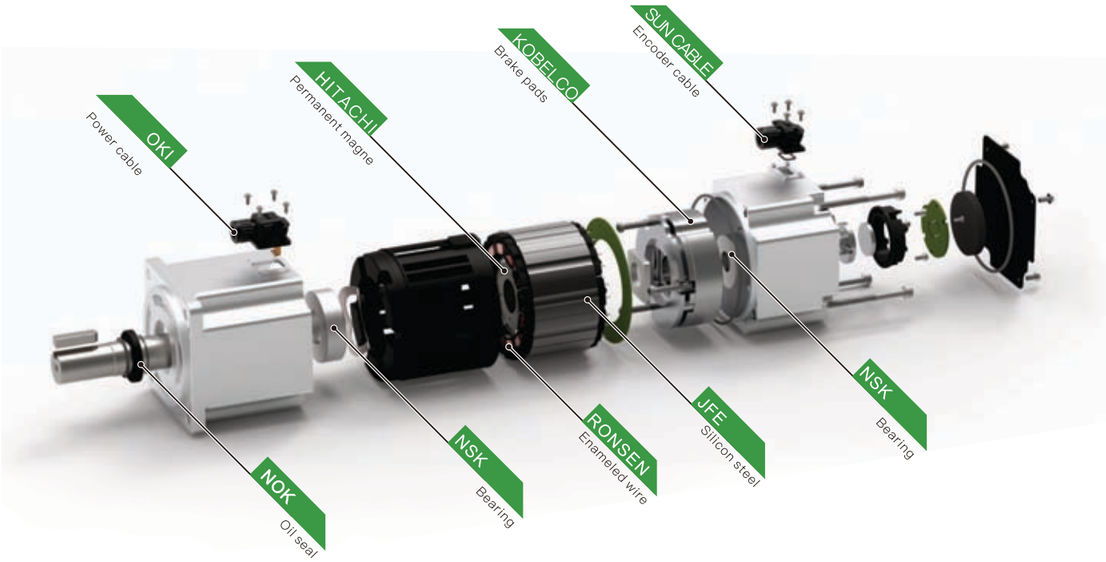


## Model name identification

SV - X3 - MA - 075 A - B 2 L N - ****

Special specifications

**Series name**

| |
|---|
| X1/X3Series |
| X2 Series |

**Inertia specifications**

| | |
|---|---|
| MA | Low inertia |
| MM | Middle inertia |
| MH | High inertia |
| MG | ow-speed & high-torque |
| MH*Q | Flat type |

**Design code**

A /B /C /D /H

**Power specifications**

| | | | |
|---|---|---|---|
| 005 | 50W | 150 | 1.5KW |
| 010 | 100W | 180 | 1.8KW |
| 020 | 200W | 200 | 2KW |
| 040 | 400W | 230 | 2.3KW |
| 075 | 750W | 300 | 3KW |
| 085 | 850W | 400 | 4KW |
| 100 | 1KW | 500 | 5KW |
| 130 | 1.3KW | - | - |

**Brake specifications**

| | |
|---|---|
| N | No brake |
| B | With brake |
| Y | Unidirectional brake |
| X | Ultra-thin dual power brake |

**Voltage specifications**

| | | | |
|---|---|---|---|
| 1 | AC110V | 6 | DC48V |
| 2 | AC220V | 8 | DC24V |
| 4 | AC380V | 9 | DC36V |

**Shaft-end specifications**

Notes: With keyway by default
✪: Only support X2/X6 series motor of flange 40~80

| | |
|---|---|
| K | Keyway shaft/no oil seal |
| L | Keyway shaft/with oil seal |
| C | Connector type/with oil seal |
| D | Connector type/no oil seal |

**Encoder specifications**

| | |
|---|---|
| N | Incremental 17-bit |
| A | Absolute 17-bit |
| D | Multi-turn 23-bit optical encoder |
| T | Tama-gawa single-turn 17-bit |
| M | Tama-gawa multi-turn 17-bit |
| K | Nikon single-turn absolute optical encoder 20-bit |
| L | Nikon multi-turn absolute optical encoder 20-bit |





# X2 NEW!

## Servo Motors

# MA020A Low inertia [leadwire type]


| Rated voltage |
|---|
| AC220V |

| Rated output |
|---|
| 200W |

| Motor type |
|---|
| MA Low inertia |

| Flange size |
|---|
| □ 60mm |

## Specifications

| Items | | Specifications |
|---|---|---|
| Model Name | M□□□□□2□□ | 200W/Low inertia /MA020A |
| Fitting flange size | (mm) | 60 |
| Approximate mass (no brake) | (Kg) | 0.9 |
| Approximate mass (with brake) | (Kg) | 1.3 |
| Rated voltage | (V) | Ac220 |
| Rated output | (W) | 200 |
| Rated torque | (N.m) | 0.64 |
| Instantaneous max. torque | (N.m) | 1.91 |
| Rated current | (Arms) | 1.7 |
| Instantaneous max. current | (Arms) | 6.5 |
| Rated speed | (r/min) | 3000 |
| Max. speed | (r/min) | 6000 |
| Torque constant | (N.m/A) | 0.427 |
| Induced voltage constant per phase | MV(r/min) | 14.5 |
| Rated power rate (KW/S) | No brake | 28.9 |
| | With brake | 23.8 |
| Mechanical time constant (ms) | No brake | 0.728 |
| | With brake | 0.848 |
| Electrical time constant | (ms) | 6.17 |
| Moment of inertia $x10^{-4}Kg.m^2$ | No brake | 0.16 |
| | With brake | 0.17 |

## Brake specification

| Brake specification | Unit | parameter |
|---|---|---|
| Usage | – | Holding brake |
| Rated voltage | V | DC24V ±10% |
| Rated current | A | 0.36 |
| Static friction torque | Nm | 1.6or more |
| Suction time | ms | 50or less |
| Release time | ms | 20or less |
| Release voltage | v | DC1Vor more |

## Permissible load

| Permissible load | Radial load(N) | 245 |
|---|---|---|
| | Axial load(N) | 98 |

Notes: 1.The □□ in the model name indicates the motor structure.
2.Reach the max. speed by field weakening control

## Torque characteristics

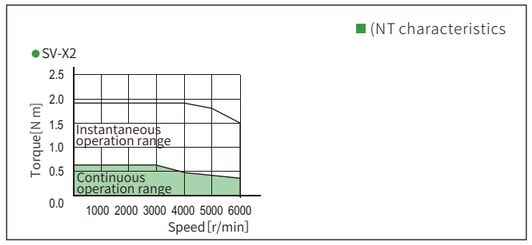


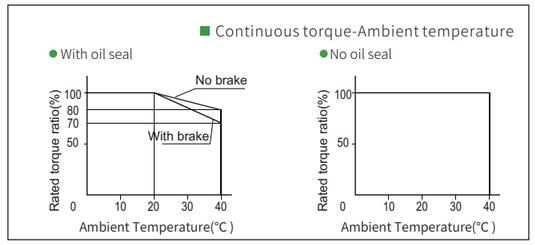


## External dimensions

### MA MA020A

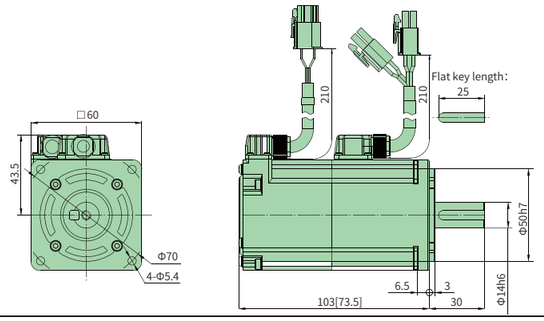


● Dimension with parentheses( ) show the motor length with no brake.

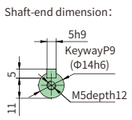








# MA040A Low inertia [leadwire type]

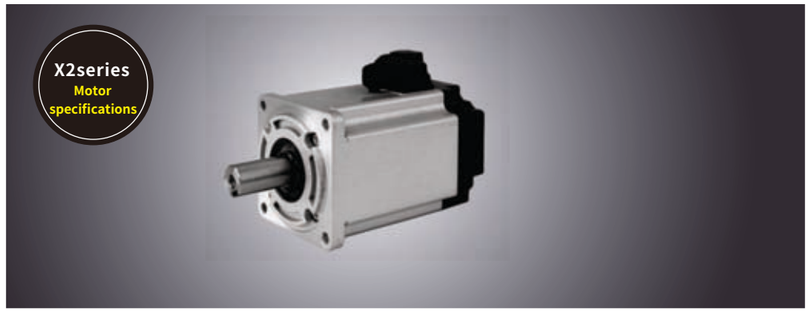


| Rated voltage |
|---|
| AC220V |

| Rated output |
|---|
| 400W |

| Motor type |
|---|
| MA Low inertia |

| Flange size |
|---|
| □ 60mm |

## Specifications

| Items | | Specifications |
|---|---|---|
| Model Name | M□□□□□2□□ | 400W/Low inertia /MA040A |
| Fitting flange size | (mm) | 60 |
| Approximate mass (no brake) | (Kg) | 1.28 |
| Approximate mass (with brake) | (Kg) | 1.67 |
| Rated voltage | (V) | Ac220 |
| Rated output | (W) | 400 |
| Rated torque | (N.m) | 1.27 |
| Instantaneous max. torque | (N.m) | 3.82 |
| Rated current | (Arms) | 2.7 |
| Instantaneous max. current | (Arms) | 10.2 |
| Rated speed | (r/min) | 3000 |
| Max. speed | (r/min) | 6000 |
| Torque constant | (N.m/A) | 0.488 |
| Induced voltage constant per phase | MV(r/min) | 17.9 |
| Rated power rate (KW/S) | No brake | 60 |
| | With brake | 54 |
| Mechanical time constant (ms) | No brake | 0.499 |
| | With brake | 0.554 |
| Electrical time constant | (ms) | 6.36 |
| Moment of inertia $x10^{-4}Kg.m^2$ | No brake | 0.28 |
| | With brake | 0.29 |

## Brake specification

| Brake specification | Unit | parameter |
|---|---|---|
| Usage | – | Holding brake |
| Rated voltage | V | DC24V±10% |
| Rated current | A | 0.36 |
| Static friction torque | Nm | 1.6or more |
| Suction time | ms | 50or less |
| Release time | ms | 20or less |
| Release voltage | v | DC1Vor more |

## Permissible load

| Permissible load | Radial load(N) | 245 |
|---|---|---|
| | Axial load(N) | 98 |

Notes: 1.The □□ in the model name indicates the motor structure.
2.Reach the max. speed by field weakening control

## Torque characteristics

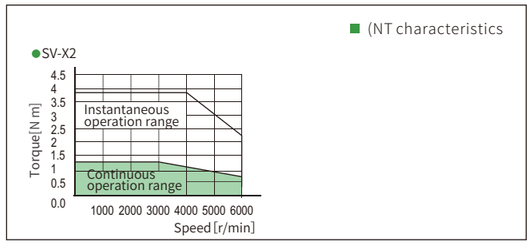


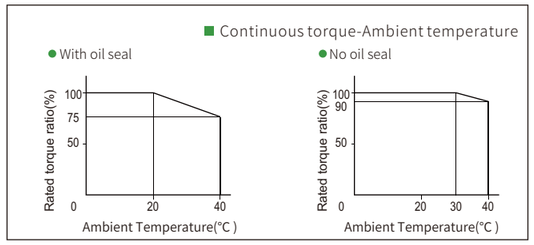


## External dimensions

### MA MA040A

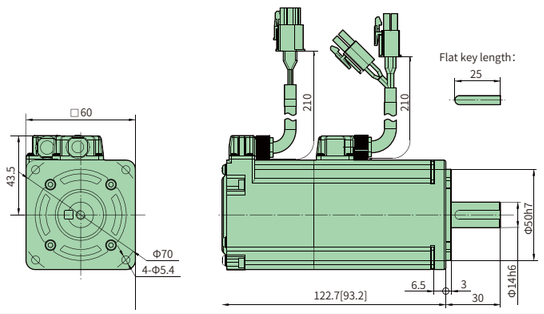


● Dimension with parentheses( ) show the motor length with no brake.

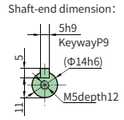

# MA075A Low inertia [leadwire type]


| Rated voltage |
|---|
| AC220V |

| Rated output |
|---|
| 750W |

| Motor type |
|---|
| MA Low inertia |

| Flange size |
|---|
| □ 80mm |

## Specifications

| Items | | Specifications |
|---|---|---|
| Model Name | M□□□□□2□□ | 750W/Low inertia /MA075A |
| Fitting flange size | (mm) | 80 |
| Approximate mass (no brake) | (Kg) | 2.25 |
| Approximate mass (with brake) | (Kg) | 3.01 |
| Rated voltage | (V) | Ac220 |
| Rated output | (W) | 750 |
| Rated torque | (N.m) | 2.39 |
| Instantaneous max. torque | (N.m) | 7.16 |
| Rated current | (Arms) | 4.2 |
| Instantaneous max. current | (Arms) | 17.4 |
| Rated speed | (r/min) | 3000 |
| Max. speed | (r/min) | 6000 |
| Torque constant | (N.m/A) | 0.583 |
| Induced voltage constant per phase | MV(r/min) | 21.33 |
| Rated power rate (KW/S) | No brake | 59.4 |
| | With brake | 53.8 |
| Mechanical time constant (ms) | No brake | 0.518 |
| | With brake | 0.572 |
| Electrical time constant | (ms) | 11.4 |
| Moment of inertia $x10^{-4}Kg.m^2$ | No brake | 0.96 |
| | With brake | 1.07 |

## Brake specification

| Brake specification | Unit | parameter |
|---|---|---|
| Usage | – | Holding brake |
| Rated voltage | V | DC24V±10% |
| Rated current | A | 0.42 |
| Static friction torque | Nm | 3.8or more |
| Suction time | ms | 70or less |
| Release time | ms | 20or less |
| Release voltage | v | DC1Vor more |

## Permissible load

| Permissible load | Radial load(N) | 392 |
|---|---|---|
| | Axial load(N) | 147 |

Notes: 1.The □□ in the model name indicates the motor structure.
2.Reach the max. speed by field weakening control

## Torque characteristics

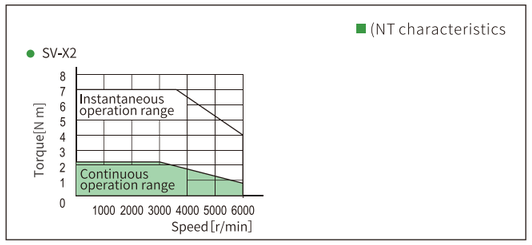


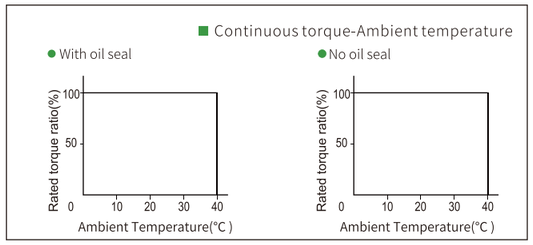


## External dimensions

### MA MA075A

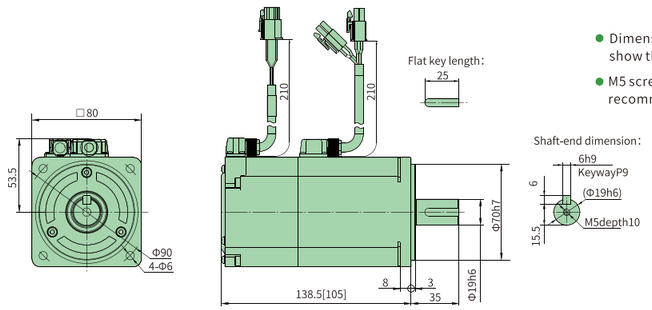


- Dimension with parentheses( ) show the motor length with no brake.
- M5 screws with gasket are recommended for motors of flange 80.







# MH005A High inertia [leadwire type]

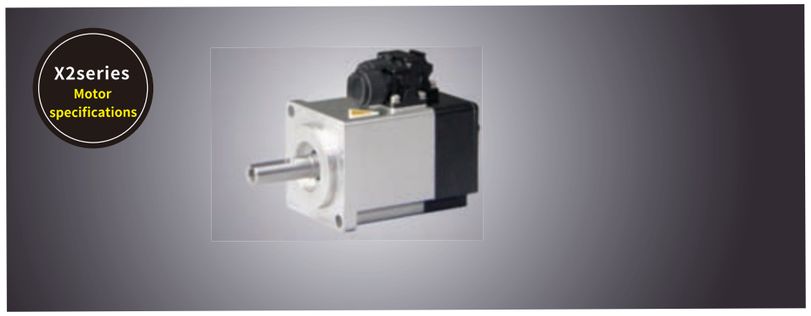


| Rated voltage |
|---|
| AC220V |

| Rated output |
|---|
| 50W |

| Motor type |
|---|
| MH High inertia |

| Flange size |
|---|
| □ 40mm |

## Specifications

| Items | | Specifications |
|---|---|---|
| Model Name | M□□□□□2□□-0001 | 50W/High inertia /MH005A |
| Fitting flange size | (mm) | 40 |
| Approximate mass (no brake) | (Kg) | 0.33 |
| Approximate mass (with brake) | (Kg) | 0.55 |
| Rated voltage | (V) | AC220 |
| Rated output | (W) | 50 |
| Rated torque | (N.m) | 0.16 |
| Instantaneous max. torque | (N.m) | 0.56 |
| Rated current | (Arms) | 1.1 |
| Instantaneous max. current | (Arms) | 3.89 |
| Rated speed | (r/min) | 3000 |
| Max. speed | (r/min) | 6500 |
| Torque constant | (N.m/A) | 0.168 |
| Induced voltage constant per phase | MV(r/min) | 5 |
| Rated power rate (KW/S) | No brake | 6.7 |
| | With brake | 6.1 |
| Mechanical time constant (ms) | No brake | 2.8 |
| | With brake | 3.09 |
| Electrical time constant | (ms) | 1.12 |
| Moment of inertia $x10^{-4}Kg.m^2$ | No brake | 0.038 |
| | With brake | 0.042 |

## Brake specification

| Brake specification | Unit | parameter |
|---|---|---|
| Usage | – | Holding brake |
| Rated voltage | V | DC24V ±10% |
| Rated current | A | 0.25 |
| Static friction torque | Nm | 0.38or more |
| Suction time | ms | 35or less |
| Release time | ms | 20or less |
| Release voltage | v | DC1Vor more |

## Permissible load

| Permissible load | Radial load(N) | 68 |
|---|---|---|
| | Axial load(N) | 58 |

Notes: The □□ in the model name indicates the motor structure.

## Torque characteristics

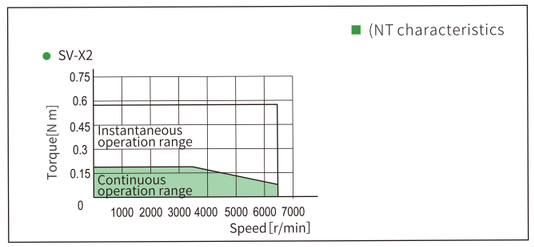


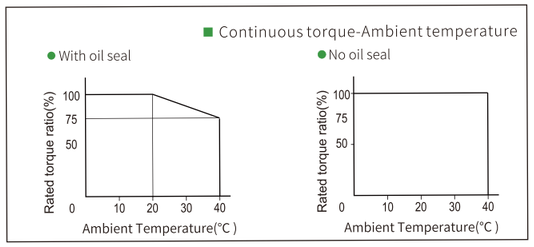


## External dimensions

### MH MH005A

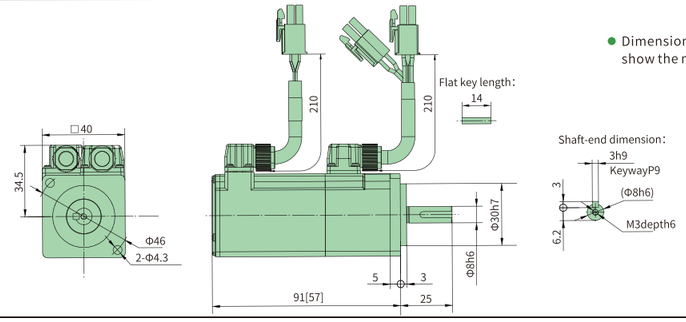


- Dimension with parentheses( ) show the motor length with no brake.

# MH005C High inertia [Connector type]


| Rated voltage |
|---|
| AC220V |

| Rated output |
|---|
| 50W |

| Motor type |
|---|
| MH High inertia |

| Flange size |
|---|
| □ 40mm |

## Specifications

| Items | | Specifications |
|---|---|---|
| Model Name | M□□□□□2□□-0001 | 50W/High inertia /MH005C |
| Fitting flange size | (mm) | 40 |
| Approximate mass (no brake) | (Kg) | 0.33 |
| Approximate mass (with brake) | (Kg) | 0.55 |
| Rated voltage | (V) | AC220 |
| Rated output | (W) | 50 |
| Rated torque | (N.m) | 0.16 |
| Instantaneous max. torque | (N.m) | 0.56 |
| Rated current | (Arms) | 1.1 |
| Instantaneous max. current | (Arms) | 3.89 |
| Rated speed | (r/min) | 3000 |
| Max. speed | (r/min) | 6500 |
| Torque constant | (N.m/A) | 0.168 |
| Induced voltage constant per phase | MV(r/min) | 5 |
| Rated power rate (KW/S) | No brake | 6.7 |
| | With brake | 6.1 |
| Mechanical time constant (ms) | No brake | 2.8 |
| | With brake | 3.09 |
| Electrical time constant | (ms) | 1.12 |
| Moment of inertia $x10^{-4}Kg.m^2$ | No brake | 0.038 |
| | With brake | 0.042 |

## Brake specification

| Brake specification | Unit | parameter |
|---|---|---|
| Usage | – | Holding brake |
| Rated voltage | V | DC24V ±10% |
| Rated current | A | 0.25 |
| Static friction torque | Nm | 0.38or more |
| Suction time | ms | 35or less |
| Release time | ms | 20or less |
| Release voltage | v | DC1Vor more |

## Permissible load

| Permissible load | Radial load(N) | 68 |
|---|---|---|
| | Axial load(N) | 58 |

Notes: The □□ in the model name indicates the motor structure.

## Torque characteristics

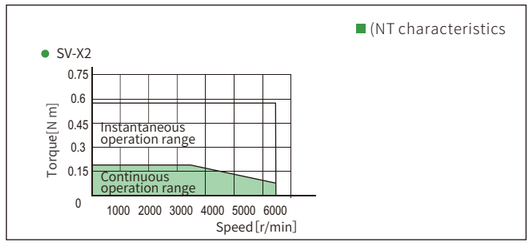


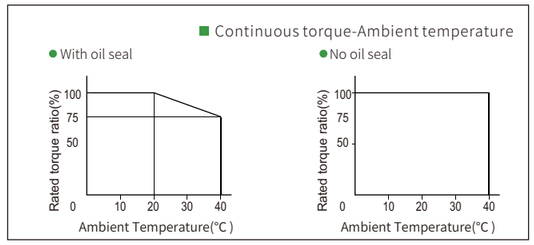


## External dimensions

### MH MH005C

● Dimension with parentheses( ) show the motor length with no brake.

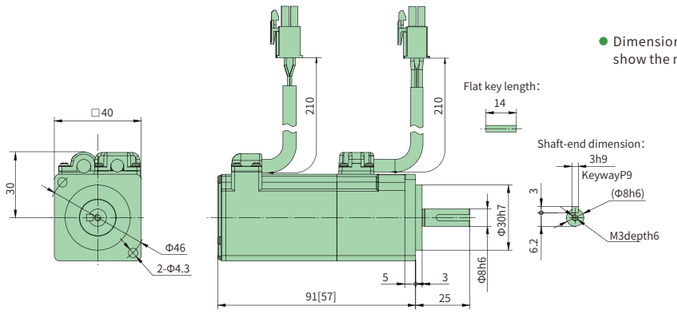








# MH010A High inertia [leadwire type]


| Rated voltage |
|---|
| AC220V |

| Rated output |
|---|
| 100W |

| Motor type |
|---|
| MH High inertia |

| Flange size |
|---|
| □ 40mm |

## Specifications

| Items | | Specifications |
|---|---|---|
| Model Name | M□□□□□2□□-0001 | 100W/High inertia /MH010A |
| Fitting flange size | (mm) | 40 |
| Approximate mass (no brake) | (Kg) | 0.45 |
| Approximate mass (with brake) | (Kg) | 0.66 |
| Rated voltage | (V) | AC220 |
| Rated output | (W) | 100 |
| Rated torque | (N.m) | 0.32 |
| Instantaneous max. torque | (N.m) | 1.11 |
| Rated current | (Arms) | 1.1 |
| Instantaneous max. current | (Arms) | 3.89 |
| Rated speed | (r/min) | 3000 |
| Max. speed | (r/min) | 6500 |
| Torque constant | (N.m/A) | 0.327 |
| Induced voltage constant per phase | MV(r/min) | 11.1 |
| Rated power rate (KW/S) | No brake | 14.4 |
| | With brake | 13.8 |
| Mechanical time constant (ms) | No brake | 2.17 |
| | With brake | 2.26 |
| Electrical time constant | (ms) | 1.32 |
| Moment of inertia $x10^{-4}Kg.m^2$ | No brake | 0.071 |
| | With brake | 0.074 |

## Brake specification

| Brake specification | Unit | parameter |
|---|---|---|
| Usage | – | Holding brake |
| Rated voltage | V | DC24V ±10% |
| Rated current | A | 0.3 |
| Static friction torque | Nm | 0.38or more |
| Suction time | ms | 35or less |
| Release time | ms | 20or less |
| Release voltage | v | DC1Vor more |

## Permissible load

| Permissible load | Radial load(N) | 68 |
|---|---|---|
| | Axial load(N) | 58 |

Notes: The □□ in the model name indicates the motor structure.

## Torque characteristics

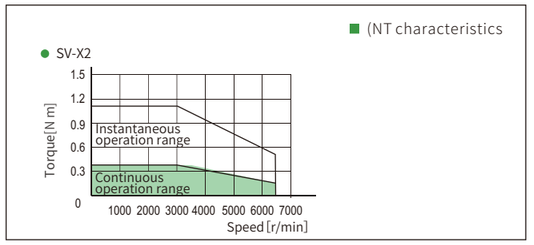


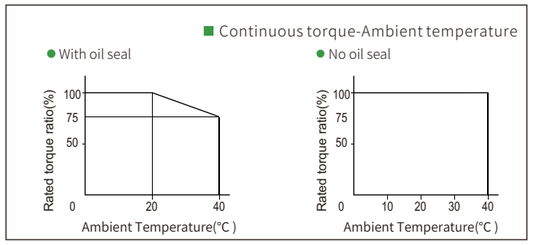


## External dimensions

### MH MH010A

● Dimension with parentheses( ) show the motor length with no brake.

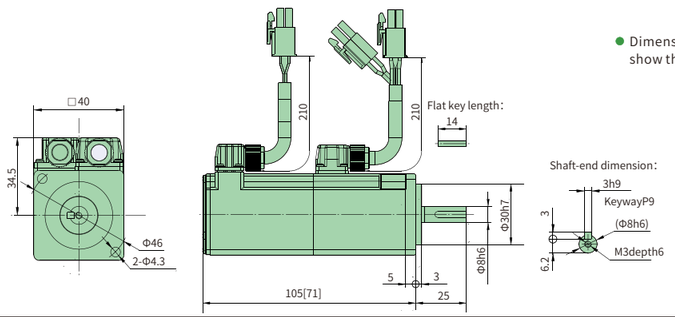

# MH010C High inertia [Compact type]

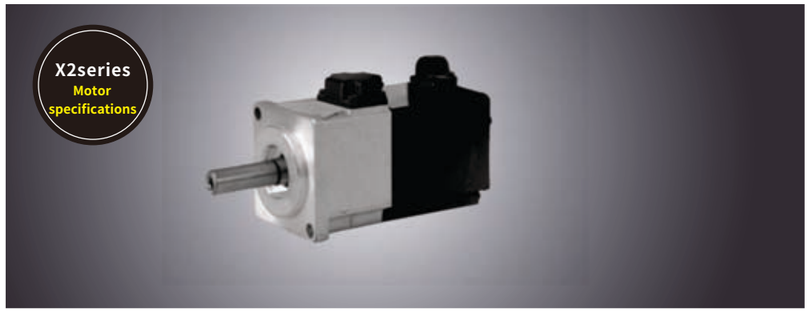


| Rated voltage |
|---|
| AC220V |

| Rated output |
|---|
| 100W |

| Motor type |
|---|
| MH High inertia |

| Flange size |
|---|
| □ 40mm |

## Specifications

| Items | | Specifications |
|---|---|---|
| Model Name | M□□□□□2□□-0001 | 100W/High inertia /MH010C |
| Fitting flange size | (mm) | 40 |
| Approximate mass (no brake) | (Kg) | 0.45 |
| Approximate mass (with brake) | (Kg) | 0.66 |
| Rated voltage | (V) | AC220 |
| Rated output | (W) | 100 |
| Rated torque | (N.m) | 0.32 |
| Instantaneous max. torque | (N.m) | 1.1 1 |
| Rated current | (Arms) | 1.1 |
| Instantaneous max. current | (Arms) | 3.89 |
| Rated speed | (r/min) | 3000 |
| Max. speed | (r/min) | 6500 |
| Torque constant | (N.m/A) | 0.327 |
| Induced voltage constant per phase | MV(r/min) | 11.1 |
| Rated power rate (KW/S) | No brake | 14.4 |
| | With brake | 13.8 |
| Mechanical time constant (ms) | No brake | 2.17 |
| | With brake | 2.26 |
| Electrical time constant | (ms) | 1.32 |
| Moment of inertia $x10^{-4}Kg.m^2$ | No brake | 0.071 |
| | With brake | 0.074 |

## Brake specification

| Brake specification | Unit | parameter |
|---|---|---|
| Usage | – | Holding brake |
| Rated voltage | V | DC24V ±10% |
| Rated current | A | 0.3 |
| Static friction torque | Nm | 0.38or more |
| Suction time | ms | 35or less |
| Release time | ms | 20or less |
| Release voltage | v | DC1Vor more |

## Permissible load

| | | |
|---|---|---|
| Permissible load | Radial load(N) | 68 |
| | Axial load(N) | 58 |

Notes: The □□ in the model name indicates the motor structure.

## Torque characteristics

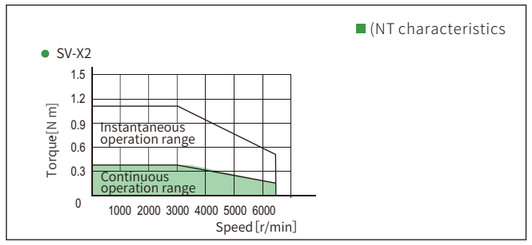


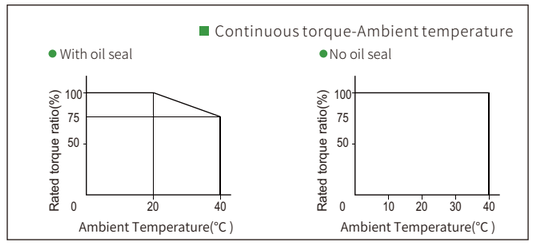


## External dimensions

### MH MH010C

● Dimension with parentheses( ) show the motor length with no brake.

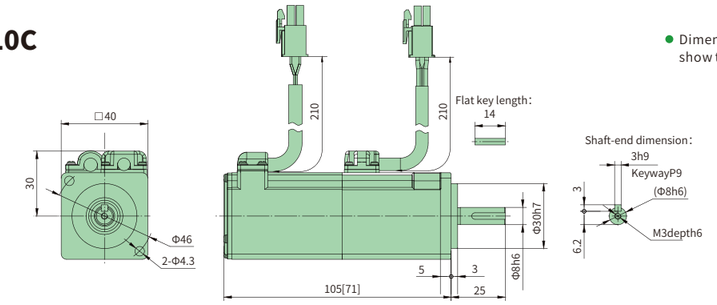








# MH020A High inertia [leadwire type]


| Rated voltage |
|---|
| AC220V |

| Rated output |
|---|
| 200W |

| Motor type |
|---|
| MH High inertia |

| Flange size |
|---|
| □ 60mm |

## Specifications

| Items | | Specifications |
|---|---|---|
| Model Name | M□□□□□2□□ | 200W/High inertia /MH020A |
| Fitting flange size | (mm) | 60 |
| Approximate mass (no brake) | (Kg) | 0.87 |
| Approximate mass (with brake) | (Kg) | 1.27 |
| Rated voltage | (V) | Ac220 |
| Rated output | (W) | 200 |
| Rated torque | (N.m) | 0.64 |
| Instantaneous max. torque | (N.m) | 2.23 |
| Rated current | (Arms) | 1.4 |
| Instantaneous max. current | (Arms) | 4.87 |
| Rated speed | (r/min) | 3000 |
| Max. speed | (r/min) | 6500 |
| Torque constant | (N.m/A) | 0.5 |
| Induced voltage constant per phase | MV(r/min) | 14.61 |
| Rated power rate (KW/S) | No brake | 14.1 |
| | With brake | 13.2 |
| Mechanical time constant (ms) | No brake | 1.39 |
| | With brake | 1.49 |
| Electrical time constant | (ms) | 3.9 |
| Moment of inertia $x10^{-4}Kg.m^2$ | No brake | 0.29 |
| | With brake | 0.31 |

## Brake specification

| Brake specification | Unit | parameter |
|---|---|---|
| Usage | – | Holding brake |
| Rated voltage | V | DC24V±10% |
| Rated current | A | 0.36 |
| Static friction torque | Nm | 1.6or more |
| Suction time | ms | 50or less |
| Release time | ms | 20or less |
| Release voltage | v | DC1Vor more |

## Permissible load

| | | |
|---|---|---|
| Permissible load | Radial load(N) | 245 |
| | Axial load(N) | 98 |

Notes: 1.The □□ in the model name indicates the motor structure.
2.Reach the max. speed by field weakening control

## Torque characteristics

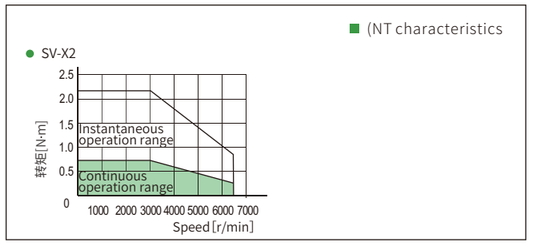


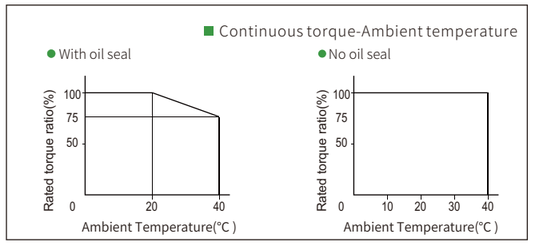


## External dimensions

### MH MH020A

● Dimension with parentheses( ) show the motor length with no brake.

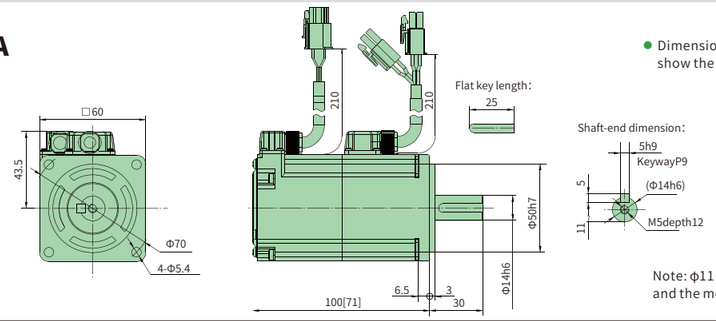


Note: Φ11 output shaft for this motor and the model name is :M□□□□□2J□

# MH040A High inertia [Connector type]


| Rated voltage |
|---|
| AC220V |

| Rated output |
|---|
| 400W |

| Motor type |
|---|
| MH High inertia |

| Flange size |
|---|
| □ 60mm |

## Specifications

| Items | | Specifications |
|---|---|---|
| Model Name | M□□□□□2□□ | 400WHigh inertia /MH040A |
| Fitting flange size | (mm) | 60 |
| Approximate mass (no brake) | (Kg) | 1.22 |
| Approximate mass (with brake) | (Kg) | 1.61 |
| Rated voltage | (V) | Ac220 |
| Rated output | (W) | 400 |
| Rated torque | (N.m) | 1.27 |
| Instantaneous max. torque | (N.m) | 4.46 |
| Rated current | (Arms) | 2.1 |
| Instantaneous max. current | (Arms) | 7.36 |
| Rated speed | (r/min) | 3000 |
| Max. speed | (r/min) | 6500 |
| Torque constant | (N.m/A) | 0.67 |
| Induced voltage constant per phase | MV(r/min) | 20.85 |
| Rated power rate (KW/S) | No brake | 28.8 |
| | With brake | 27.8 |
| Mechanical time constant (ms) | No brake | 1.3 |
| | With brake | 1.35 |
| Electrical time constant | (ms) | 4.21 |
| Moment of inertia $x10^{-4}Kg.m^2$ | No brake | 0.56 |
| | With brake | 0.58 |

## Brake specification

| Brake specification | Unit | parameter |
|---|---|---|
| Usage | – | Holding brake |
| Rated voltage | V | DC24V ±10% |
| Rated current | A | 0.36 |
| Static friction torque | Nm | 1.6or more |
| Suction time | ms | 50or less |
| Release time | ms | 20or less |
| Release voltage | v | DC1Vor more |

## Permissible load

| Permissible load | | |
|---|---|---|
| | Radial load(N) | 245 |
| | Axial load(N) | 98 |

Notes: 1.The □□ in the model name indicates the motor structure.
2.Reach the max. speed by field weakening control

## Torque characteristics

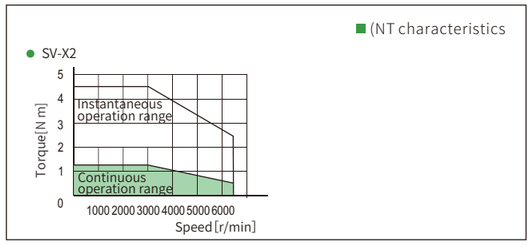


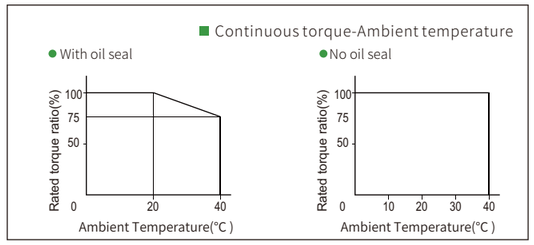


## External dimensions

### MH040A

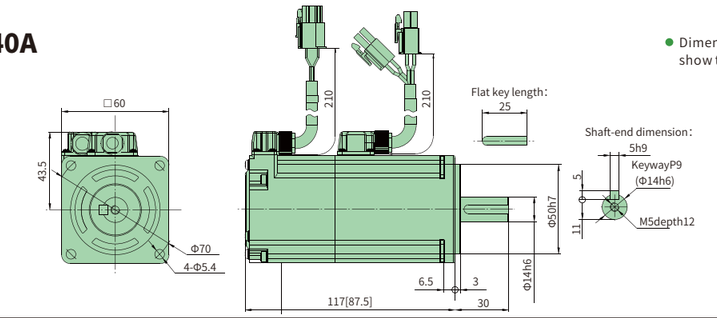


- Dimension with parentheses( ) show the motor length with no brake.







# MH075A High inertia [leadwire type]


| Rated voltage |
|---|
| AC220V |

| Rated output |
|---|
| 750W |

| Motor type |
|---|
| MH High inertia |

| Flange size |
|---|
| □ 80mm |

## Specifications

| Items | | Specifications |
|---|---|---|
| Model Name | M□□□□□2□□ | 750W/High inertia /MH075A |
| Fitting flange size | (mm) | 80 |
| Approximate mass (no brake) | (Kg) | 2.25 |
| Approximate mass (with brake) | (Kg) | 3.01 |
| Rated voltage | (V) | Ac220 |
| Rated output | (W) | 750 |
| Rated torque | (N.m) | 2.39 |
| Instantaneous max. torque | (N.m) | 8.36 |
| Rated current | (Arms) | 3.8 |
| Instantaneous max. current | (Arms) | 13.3 |
| Rated speed | (r/min) | 3000 |
| Max. speed | (r/min) | 6000 |
| Torque constant | (N.m/A) | 0.648 |
| Induced voltage constant per phase | MV(r/min) | 22.65 |
| Rated power rate (KW/S) | No brake | 36.6 |
| | With brake | 34.4 |
| Mechanical time constant (ms) | No brake | 1.26 |
| | With brake | 1.34 |
| Electrical time constant | (ms) | 6.54 |
| Moment of inertia $x10^{-4}Kg.m^2$ | No brake | 1.56 |
| | With brake | 1.66 |

## Brake specification

| Brake specification | Unit | parameter |
|---|---|---|
| Usage | – | Holding brake |
| Rated voltage | V | DC24V ±10% |
| Rated current | A | 0.42 |
| Static friction torque | Nm | 3.8or more |
| Suction time | ms | 70or less |
| Release time | ms | 20or less |
| Release voltage | v | DC1Vor more |

## Permissible load

| Permissible load | | |
|---|---|---|
| | Radial load(N) | 392 |
| | Axial load(N) | 147 |

Notes: 1.The □□ in the model name indicates the motor structure.
2.Reach the max. speed by field weakening control

## Torque characteristics

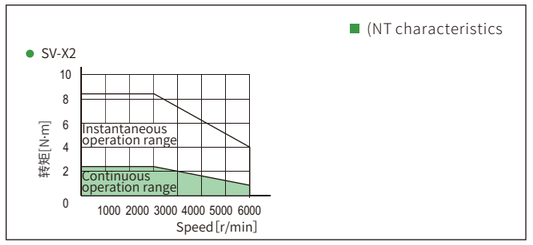


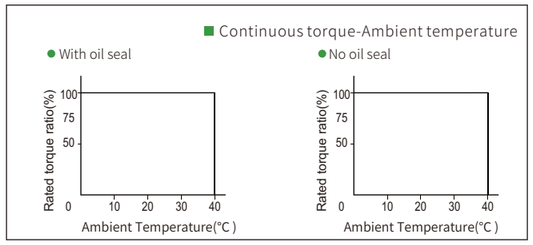


## External dimensions

### MH075A

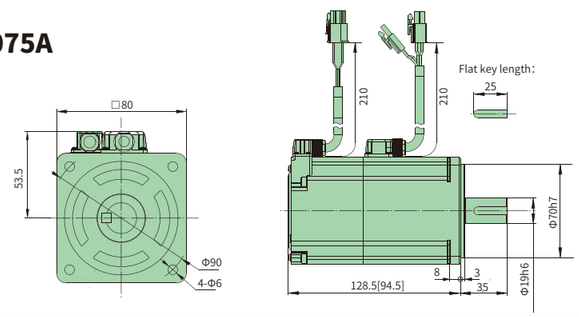


- Dimension with parentheses( ) show the motor length with no brake.
- M5 screws with gasket are recommended for motors of flange 80.

# MH100C High inertia [Connector type]


| Rated voltage |
|---|
| AC220V |

| Rated output |
|---|
| 1000W |

| Motor type |
|---|
| MH High inertia |

| Flange size |
|---|
| ☐ 80mm |

## Specifications

| Items | | Specifications |
|---|---|---|
| Model Name | M□□□□□2□□ | 1KW/High inertia /MH100C |
| Fitting flange size | (mm) | 80 |
| Approximate mass (no brake) | (Kg) | 2.68 |
| Approximate mass (with brake) | (Kg) | 3.45 |
| Rated voltage | (V) | Ac220 |
| Rated output | (W) | 1000 |
| Rated torque | (N.m) | 3.185 |
| Instantaneous max. torque | (N.m) | 11.1 3 |
| Rated current | (Arms) | 5.7 |
| Instantaneous max. current | (Arms) | 21.2 |
| Rated speed | (r/min) | 3000 |
| Max. speed | (r/min) | 6000 |
| Torque constant | (N.m/A) | 0.552 |
| Induced voltage constant per phase | MV(r/min) | 21.2 |
| Rated power rate (KW/S) | No brake | 44.7 |
| | With brake | 42.8 |
| Mechanical time constant (ms) | No brake | 1.19 |
| | With brake | 1.24 |
| Electrical time constant | (ms) | 4.72 |
| Moment of inertia $x10^{-4}Kg.m^2$ | No brake | 2 |
| | With brake | 2.1 |

## Brake specification

| Brake specification | Unit | parameter |
|---|---|---|
| Usage | – | Holding brake |
| Rated voltage | V | DC24V±10% |
| Rated current | A | 0.42 |
| Static friction torque | Nm | 3.8or more |
| Suction time | ms | 70or less |
| Release time | ms | 20or less |
| Release voltage | v | DC1Vor more |

## Permissible load

| Permissible load | | |
|---|---|---|
| | Radial load(N) | 392 |
| | Axial load(N) | 147 |

Notes: 1.The ☐☐ in the model name indicates the motor structure.
2.Reach the max. speed by field weakening control

## Torque characteristics

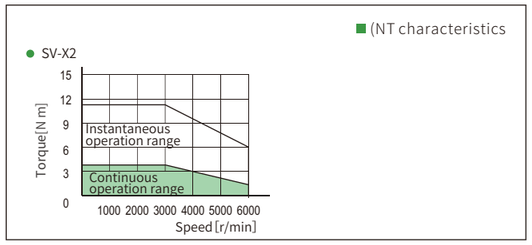


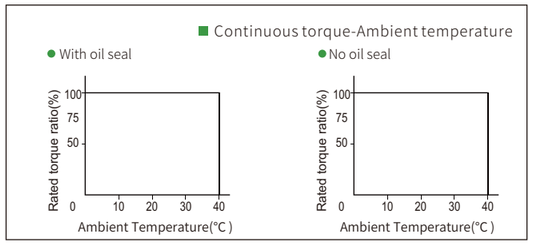


## External dimensions

### MH MH100C

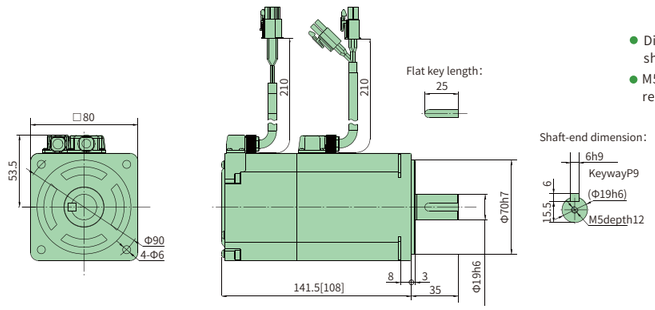


- Dimension with parentheses( ) show the motor length with no brake.
- M5 screws with gasket are recommended for motors of flange 80.





# MM100A Middle inertia[Connector type]


| Rated voltage |
|---|
| AC220V |

| Rated output |
|---|
| 1000W |

| Motor type |
|---|
| MM Middle inertia |

| Flange size |
|---|
| ☐ 130mm |

## Specifications

| Items | | Specifications |
|---|---|---|
| Model Name | M□□□□□2□□ | 1KW/Middle inertia /MM100A |
| Fitting flange size | (mm) | 130 |
| Approximate mass (no brake) | (Kg) | 4.67 |
| Approximate mass (with brake) | (Kg) | 6.27 |
| Rated voltage | (V) | AC220 |
| Rated output | (W) | 1000 |
| Rated torque | (N.m) | 4.77 |
| Instantaneous max. torque | (N.m) | 14.3 |
| Rated current | (Arms) | 5.2 |
| Instantaneous max. current | (Arms) | 15.6 |
| Rated speed | (r/min) | 2000 |
| Max. speed | (r/min) | 3000 |
| Torque constant | (N.m/A) | 0.918 |
| Induced voltage constant per phase | MV(r/min) | 33.65 |
| Rated power rate (KW/S) | No brake | 36.9 |
| | With brake | 30.8 |
| Mechanical time constant (ms) | No brake | 1.76 |
| | With brake | 2.11 |
| Electrical time constant | (ms) | 9.5 |
| Moment of inertia $x10^{-4}Kg.m^2$ | No brake | 6.18 |
| | With brake | 7.4 |

## Brake specification

| Brake specification | Unit | parameter |
|---|---|---|
| Usage | – | Holding brake |
| Rated voltage | V | DC24V ±10% |
| Rated current | A | 0.9 |
| Static friction torque | Nm | 14or more |
| Suction time | ms | 100or less |
| Release time | ms | 60or less |
| Release voltage | v | DC1Vor more |

## Permissible load

| Permissible load | | |
|---|---|---|
| | Radial load(N) | 490 |
| | Axial load(N) | 196 |

Notes: The ☐☐ in the model name indicates the motor structure.

## Torque characteristics

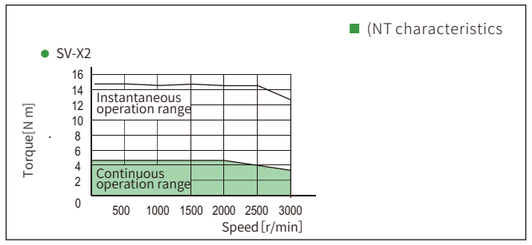


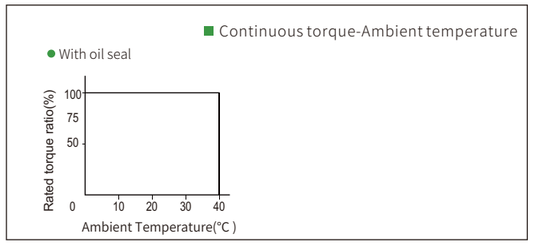


## External dimensions

### MM MM100A

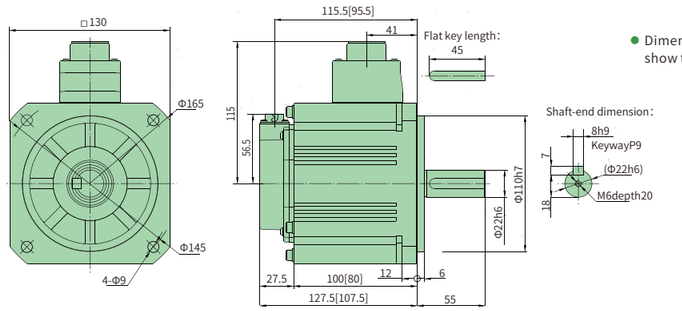


- Dimension with parentheses( ) show the motor length with no brake.

# MM100A Middle inertia [leadwire type]


| Rated voltage |
|---|
| AC220V |

| Rated output |
|---|
| 1000W |

| Motor type |
|---|
| MM Middle inertia |

| Flange size |
|---|
| ☐ 130mm |

## Specifications

| Items | | Specifications |
|---|---|---|
| Model Name | M□□□□□2□□ | 1KW/Middle inertia /MM100A |
| Fitting flange size | (mm) | 130 |
| Approximate mass (no brake) | (Kg) | 4.67 |
| Approximate mass (with brake) | (Kg) | 6.27 |
| Rated voltage | (V) | AC220 |
| Rated output | (W) | 1000 |
| Rated torque | (N.m) | 4.77 |
| Instantaneous max. torque | (N.m) | 14.3 |
| Rated current | (Arms) | 5.2 |
| Instantaneous max. current | (Arms) | 15.6 |
| Rated speed | (r/min) | 2000 |
| Max. speed | (r/min) | 3000 |
| Torque constant | (N.m/A) | 0.918 |
| Induced voltage constant per phase | MV(r/min) | 33.65 |
| Rated power rate (KW/S) | No brake | 36.9 |
| | With brake | 30.8 |
| Mechanical time constant (ms) | No brake | 1.76 |
| | With brake | 2.11 |
| Electrical time constant | (ms) | 9.5 |
| Moment of inertia $x10^{-4}Kg.m^2$ | No brake | 6.18 |
| | With brake | 7.4 |

## Brake specification

| Brake specification | Unit | parameter |
|---|---|---|
| Usage | – | Holding brake |
| Rated voltage | V | DC24V ±10% |
| Rated current | A | 0.9 |
| Static friction torque | Nm | 14or more |
| Suction time | ms | 100or less |
| Release time | ms | 60or less |
| Release voltage | v | DC1Vor more |

## Permissible load

| | | |
|---|---|---|
| Permissible load | Radial load(N) | 490 |
| | Axial load(N) | 196 |

Notes: The ☐☐ in the model name indicates the motor structure.

## Torque characteristics

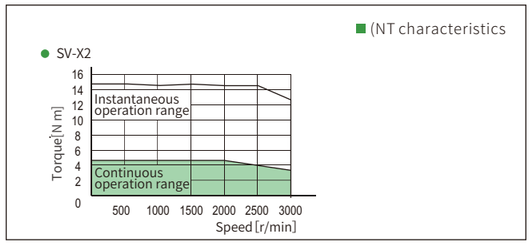


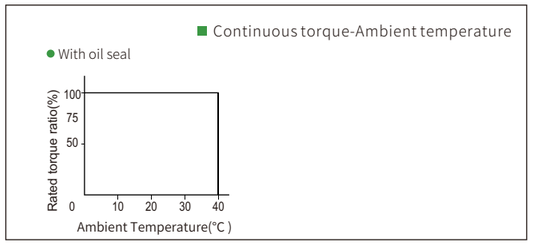


## External dimensions

**MM MM100A**

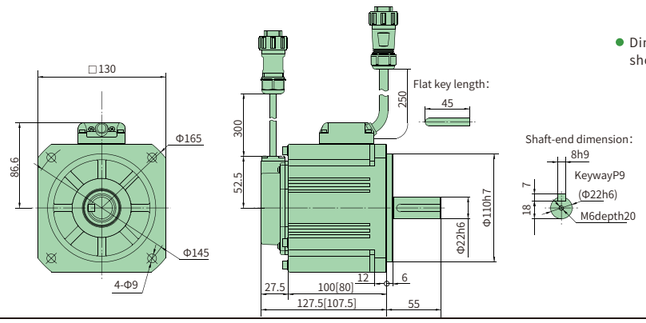


● Dimension with parentheses( ) show the motor length with no brake.







# MM150A Middle inertia [Connector type]


| Rated voltage |
|---|
| AC220V |

| Rated output |
|---|
| 1500W |

| Motor type |
|---|
| MM Middle inertia |

| Flange size |
|---|
| ☐ 130mm |

## Specifications

| Items | | Specifications |
|---|---|---|
| Model Name | M□□□□□2□□ | 1.5KW/Middle inertia /MM150A |
| Fitting flange size | (mm) | 130 |
| Approximate mass (no brake) | (Kg) | 5.87 |
| Approximate mass (with brake) | (Kg) | 7.47 |
| Rated voltage | (V) | AC220 |
| Rated output | (W) | 1500 |
| Rated torque | (N.m) | 7.16 |
| Instantaneous max. torque | (N.m) | 21.5 |
| Rated current | (Arms) | 8 |
| Instantaneous max. current | (Arms) | 24 |
| Rated speed | (r/min) | 2000 |
| Max. speed | (r/min) | 3000 |
| Torque constant | (N.m/A) | 0.895 |
| Induced voltage constant per phase | MV(r/min) | 34.84 |
| Rated power rate (KW/S) | No brake | 56 |
| | With brake | 49.3 |
| Mechanical time constant (ms) | No brake | 1.41 |
| | With brake | 1. 6 |
| Electrical time constant | (ms) | 12.7 |
| Moment of inertia $x10^{-4}Kg.m^2$ | No brake | 9.16 |
| | With brake | 10.4 |

## Brake specification

| Brake specification | Unit | parameter |
|---|---|---|
| Usage | – | Holding brake |
| Rated voltage | V | DC24V ±10% |
| Rated current | A | 0.9 |
| Static friction torque | Nm | 14or more |
| Suction time | ms | 100or less |
| Release time | ms | 60or less |
| Release voltage | v | DC1Vor more |

## Permissible load

| | | |
|---|---|---|
| Permissible load | Radial load(N) | 490 |
| | Axial load(N) | 196 |

Notes: The ☐☐ in the model name indicates the motor structure.

## Torque characteristics

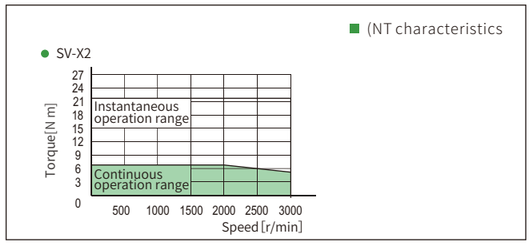


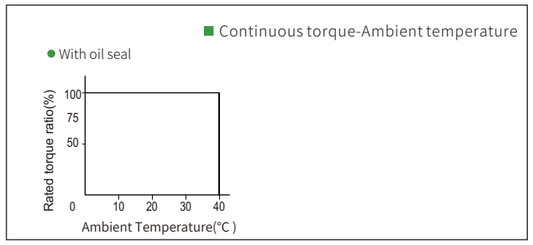


## External dimensions

**MM MM150A**

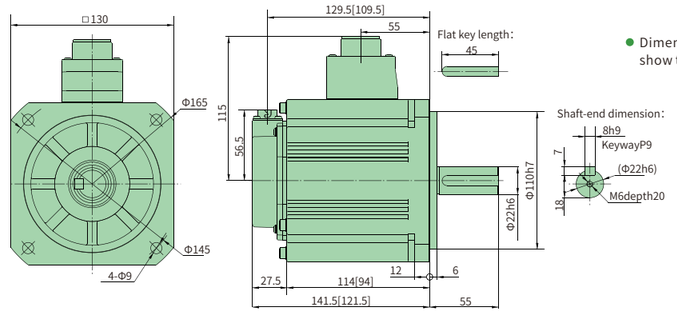


● Dimension with parentheses( ) show the motor length with no brake.

# MM150A [leadwire type]


| Rated voltage |
|---|
| AC220V |

| Rated output |
|---|
| 1500W |

| Motor type |
|---|
| MM Middle inertia |

| Flange size |
|---|
| ☐ 130mm |

## Specifications

| Items | | Specifications |
|---|---|---|
| Model Name | M□□□□□2□□ | 1.5KW/Middle inertia /MM150A |
| Fitting flange size | (mm) | 130 |
| Approximate mass (no brake) | (Kg) | 5.87 |
| Approximate mass (with brake) | (Kg) | 7.47 |
| Rated voltage | (V) | AC220 |
| Rated output | (W) | 1500 |
| Rated torque | (N.m) | 7.16 |
| Instantaneous max. torque | (N.m) | 21.5 |
| Rated current | (Arms) | 8 |
| Instantaneous max. current | (Arms) | 24 |
| Rated speed | (r/min) | 2000 |
| Max. speed | (r/min) | 3000 |
| Torque constant | (N.m/A) | 0.895 |
| Induced voltage constant per phase | MV(r/min) | 34.84 |
| Rated power rate (KW/S) | No brake | 56 |
| | With brake | 49.3 |
| Mechanical time constant (ms) | No brake | 1.41 |
| | With brake | 1.6 |
| Electrical time constant | (ms) | 12.7 |
| Moment of inertia $x10^{-4}Kg.m^2$ | No brake | 9.16 |
| | With brake | 10.4 |

## Brake specification

| Brake specification | Unit | parameter |
|---|---|---|
| Usage | – | Holding brake |
| Rated voltage | V | DC24V ±10% |
| Rated current | A | 0.9 |
| Static friction torque | Nm | 14or more |
| Suction time | ms | 100or less |
| Release time | ms | 60or less |
| Release voltage | v | DC1Vor more |

## Permissible load

| Permissible load | | |
|---|---|---|
| | Radial load(N) | 490 |
| | Axial load(N) | 196 |

Notes: The ☐☐ in the model name indicates the motor structure.

## Torque characteristics

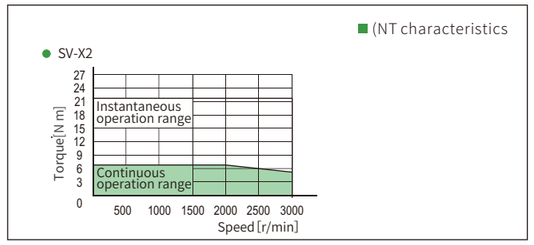


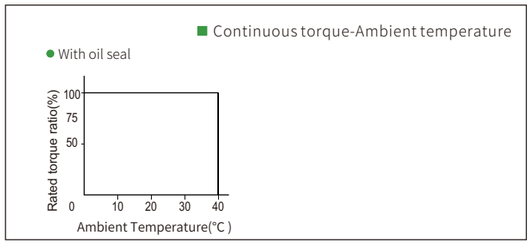


## External dimensions

### MM150A

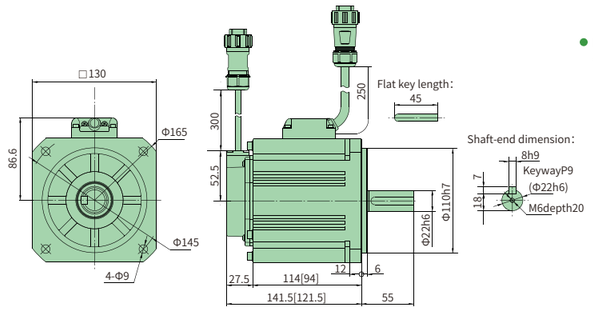


- Dimension with parentheses( ) show the motor length with no brake.







# MM200A Middle inertia[Connector type]


| Rated voltage |
|---|
| AC220V |

| Rated output |
|---|
| 2000W |

| Motor type |
|---|
| MM Middle inertia |

| Flange size |
|---|
| ☐ 130mm |

## Specifications

| Items | | Specifications |
|---|---|---|
| Model Name | M□□□□□2□□ | 2KW/Middle inertia /MM200A |
| Fitting flange size | (mm) | 130 |
| Approximate mass (no brake) | (Kg) | 6.98 |
| Approximate mass (with brake) | (Kg) | 8.58 |
| Rated voltage | (V) | AC220 |
| Rated output | (W) | 2000 |
| Rated torque | (N.m) | 9.55 |
| Instantaneous max. torque | (N.m) | 28.6 |
| Rated current | (Arms) | 9.9 |
| Instantaneous max. current | (Arms) | 30 |
| Rated speed | (r/min) | 2000 |
| Max. speed | (r/min) | 3000 |
| Torque constant | (N.m/A) | 0.9645 |
| Induced voltage constant per phase | MV(r/min) | 37.95 |
| Rated power rate (KW/S) | No brake | 75.4 |
| | With brake | 68.6 |
| Mechanical time constant (ms) | No brake | 1.24 |
| | With brake | 1.37 |
| Electrical time constant | (ms) | 13.88 |
| Moment of inertia $x10^{-4}Kg.m^2$ | No brake | 12.1 |
| | With brake | 13.3 |

## Brake specification

| Brake specification | Unit | parameter |
|---|---|---|
| Usage | – | Holding brake |
| Rated voltage | V | DC24V ±10% |
| Rated current | A | 0.9 |
| Static friction torque | Nm | 14or more |
| Suction time | ms | 100or less |
| Release time | ms | 60or less |
| Release voltage | v | DC1Vor more |

## Permissible load

| Permissible load | | |
|---|---|---|
| | Radial load(N) | 490 |
| | Axial load(N) | 196 |

Notes: The ☐☐ in the model name indicates the motor structure.

## Torque characteristics

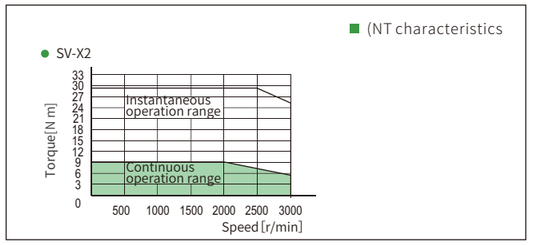


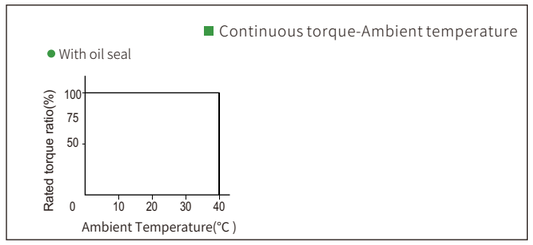


## External dimensions

### MM200A

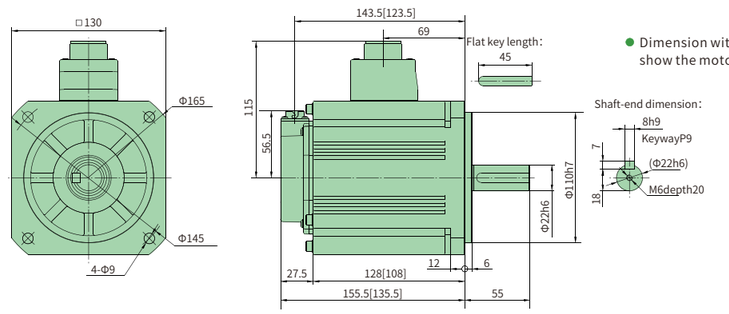


- Dimension with parentheses( ) show the motor length with no brake.

# MM200A Middle inertia [leadwire type]


| Rated voltage |
|---|
| AC220V |

| Rated output |
|---|
| 2000W |

| Motor type |
|---|
| MM Middle inertia |

| Flange size |
|---|
| ☐ 130mm |

## Specifications

| Items | | Specifications |
|---|---|---|
| Model Name | M□□□□□2□□ | 2KW/Middle inertia /MM200A |
| Fitting flange size | (mm) | 130 |
| Approximate mass (no brake) | (Kg) | 6.98 |
| Approximate mass (with brake) | (Kg) | 8.58 |
| Rated voltage | (V) | AC220 |
| Rated output | (W) | 2000 |
| Rated torque | (N.m) | 9.55 |
| Instantaneous max. torque | (N.m) | 28.6 |
| Rated current | (Arms) | 9.9 |
| Instantaneous max. current | (Arms) | 30 |
| Rated speed | (r/min) | 2000 |
| Max. speed | (r/min) | 3000 |
| Torque constant | (N.m/A) | 0.9645 |
| Induced voltage constant per phase | MV(r/min) | 37.95 |
| Rated power rate (KW/S) | No brake | 75.4 |
| | With brake | 68.6 |
| Mechanical time constant (ms) | No brake | 1.24 |
| | With brake | 1.37 |
| Electrical time constant | (ms) | 13.88 |
| Moment of inertia $x10^{-4}Kg.m^2$ | No brake | 12.1 |
| | With brake | 13.3 |

## Brake specification

| Brake specification | Unit | parameter |
|---|---|---|
| Usage | – | Holding brake |
| Rated voltage | V | DC24V ±10% |
| Rated current | A | 0.9 |
| Static friction torque | Nm | 14or more |
| Suction time | ms | 100or less |
| Release time | ms | 60or less |
| Release voltage | v | DC1Vor more |

## Permissible load

| | | |
|---|---|---|
| Permissible load | Radial load(N) | 490 |
| | Axial load(N) | 196 |

Notes: The □□ in the model name indicates the motor structure.

## Torque characteristics

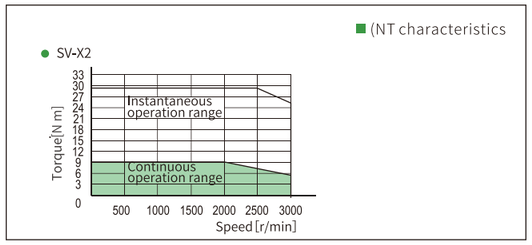


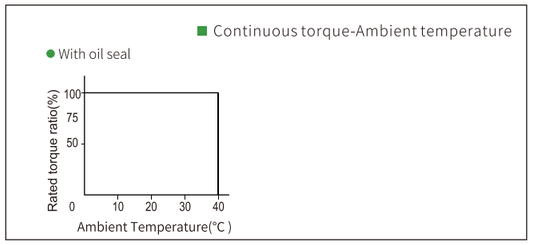


## External dimensions

### MM MM200A

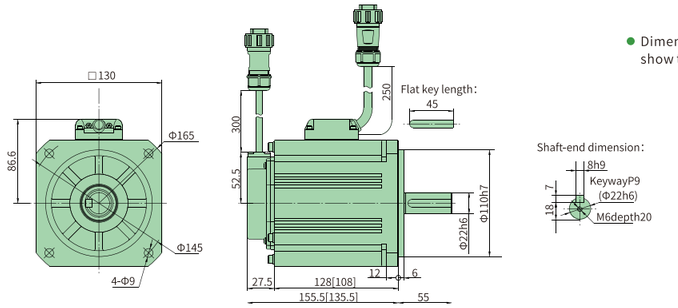


● Dimension with parentheses( ) show the motor length with no brake.







# MH100A High inertia[Connector type]


| Rated voltage |
|---|
| AC220V |

| Rated output |
|---|
| 1000W |

| Motor type |
|---|
| MH High inertia |

| Flange size |
|---|
| ☐ 130mm |

## Specifications

| Items | | Specifications |
|---|---|---|
| Model Name | M□□□□□2□□ | 1KW/High inertia /MH100A |
| Fitting flange size | (mm) | 130 |
| Approximate mass (no brake) | (Kg) | 6.29 |
| Approximate mass (with brake) | (Kg) | 7.89 |
| Rated voltage | (V) | AC220 |
| Rated output | (W) | 1000 |
| Rated torque | (N.m) | 4.77 |
| Instantaneous max. torque | (N.m) | 14.3 |
| Rated current | (Arms) | 5.2 |
| Instantaneous max. current | (Arms) | 15.6 |
| Rated speed | (r/min) | 2000 |
| Max. speed | (r/min) | 3000 |
| Torque constant | (N.m/A) | 0.918 |
| Induced voltage constant per phase | MV(r/min) | 33. 65 |
| Rated power rate (KW/S) | No brake | 9.96 |
| | With brake | 9.46 |
| Mechanical time constant (ms) | No brake | 6.52 |
| | With brake | 6.86 |
| Electrical time constant | (ms) | 9.5 |
| Moment of inertia $x10^{-4}Kg.m^2$ | No brake | 22.9 |
| | With brake | 24.1 |

## Brake specification

| Brake specification | Unit | parameter |
|---|---|---|
| Usage | – | Holding brake |
| Rated voltage | V | DC24V ±10% |
| Rated current | A | 0.9 |
| Static friction torque | Nm | 14or more |
| Suction time | ms | 100or less |
| Release time | ms | 60or less |
| Release voltage | v | DC1Vor more |

## Permissible load

| | | |
|---|---|---|
| Permissible load | Radial load(N) | 490 |
| | Axial load(N) | 196 |

Notes: The □□ in the model name indicates the motor structure.

## Torque characteristics

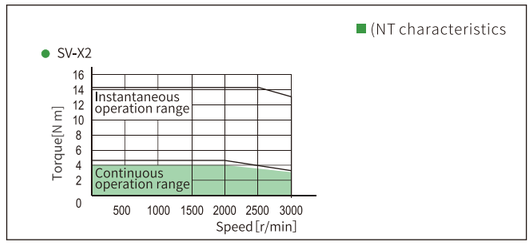


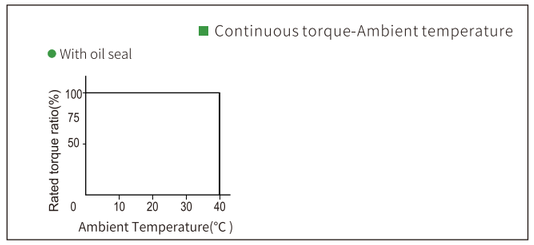


## External dimensions

### MH MH100A

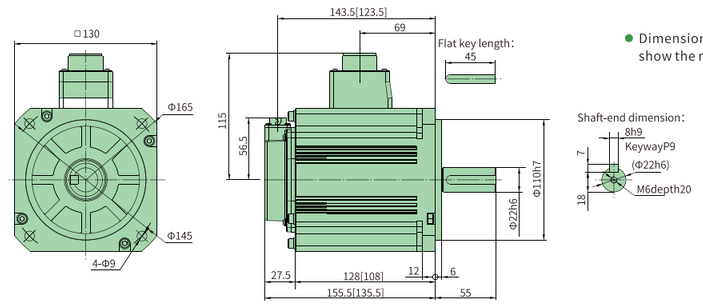


● Dimension with parentheses( ) show the motor length with no brake.

# MH100A High inertia [leadwire type]


| Rated voltage |
|---|
| AC220V |

| Rated output |
|---|
| 1000W |

| Motor type |
|---|
| MH High inertia |

| Flange size |
|---|
| ☐ 130mm |

## Specifications

| Items | | Specifications |
|---|---|---|
| Model Name | M□□□□□2□□ | 1KW/High inertia /MH100A |
| Fitting flange size | (mm) | 130 |
| Approximate mass (no brake) | (Kg) | 6.29 |
| Approximate mass (with brake) | (Kg) | 7.89 |
| Rated voltage | (V) | AC220 |
| Rated output | (W) | 1000 |
| Rated torque | (N.m) | 4.77 |
| Instantaneous max. torque | (N.m) | 14.3 |
| Rated current | (Arms) | 5.2 |
| Instantaneous max. current | (Arms) | 15.6 |
| Rated speed | (r/min) | 2000 |
| Max. speed | (r/min) | 3000 |
| Torque constant | (N.m/A) | 0.918 |
| Induced voltage constant per phase | MV(r/min) | 33. 65 |
| Rated power rate (KW/S) | No brake | 9.96 |
| | With brake | 9.46 |
| Mechanical time constant (ms) | No brake | 6.52 |
| | With brake | 6.86 |
| Electrical time constant | (ms) | 9.5 |
| Moment of inertia $x10^{-4}Kg.m^2$ | No brake | 22.9 |
| | With brake | 24.1 |

## Brake specification

| Brake specification | Unit | parameter |
|---|---|---|
| Usage | – | Holding brake |
| Rated voltage | V | DC24V ±10% |
| Rated current | A | 0.9 |
| Static friction torque | Nm | 14or more |
| Suction time | ms | 100or less |
| Release time | ms | 60or less |
| Release voltage | v | DC1Vor more |

## Permissible load

| Permissible load | | |
|---|---|---|
| | Radial load(N) | 490 |
| | Axial load(N) | 196 |

Notes: The □□ in the model name indicates the motor structure.

## Torque characteristics

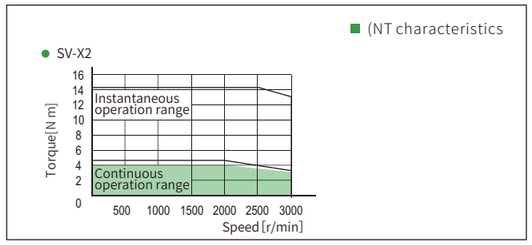


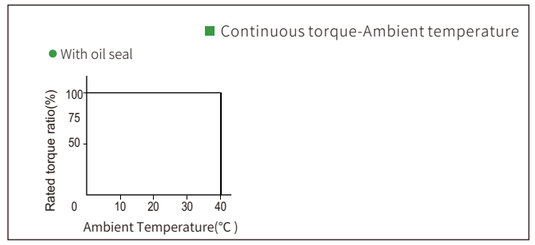


## External dimensions

### MH MH100A

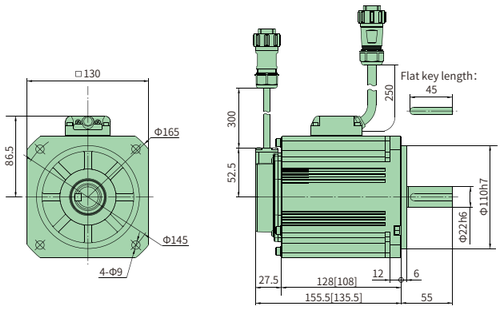


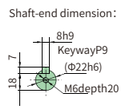


● Dimension with parentheses( ) show the motor length with no brake.







# MH150A High inertia [Connector type]


| Rated voltage |
|---|
| AC220V |

| Rated output |
|---|
| 1500W |

| Motor type |
|---|
| MH High inertia |

| Flange size |
|---|
| ☐ 130mm |

## Specifications

| Items | | Specifications |
|---|---|---|
| Model Name | M□□□□□2□□ | 1.5KW/High inertia /MH100A |
| Fitting flange size | (mm) | 130 |
| Approximate mass (no brake) | (Kg) | 7.37 |
| Approximate mass (with brake) | (Kg) | 8.97 |
| Rated voltage | (V) | AC220 |
| Rated output | (W) | 1500 |
| Rated torque | (N.m) | 7.16 |
| Instantaneous max. torque | (N.m) | 21.5 |
| Rated current | (Arms) | 8 |
| Instantaneous max. current | (Arms) | 24 |
| Rated speed | (r/min) | 2000 |
| Max. speed | (r/min) | 3000 |
| Torque constant | (N.m/A) | 0.895 |
| Induced voltage constant per phase | MV(r/min) | 34.84 |
| Rated power rate (KW/S) | No brake | 15.4 |
| | With brake | 14.8 |
| Mechanical time constant (ms) | No brake | 5.15 |
| | With brake | 5.34 |
| Electrical time constant | (ms) | 12.7 |
| Moment of inertia $x10^{-4}Kg.m^2$ | No brake | 33.4 |
| | With brake | 34.6 |

## Brake specification

| Brake specification | Unit | parameter |
|---|---|---|
| Usage | – | Holding brake |
| Rated voltage | V | DC24V ±10% |
| Rated current | A | 0.9 |
| Static friction torque | Nm | 14or more |
| Suction time | ms | 100or less |
| Release time | ms | 60or less |
| Release voltage | v | DC1Vor more |

## Permissible load

| Permissible load | | |
|---|---|---|
| | Radial load(N) | 490 |
| | Axial load(N) | 196 |

Notes: The □□ in the model name indicates the motor structure.

## Torque characteristics

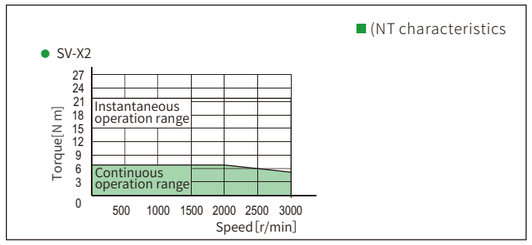


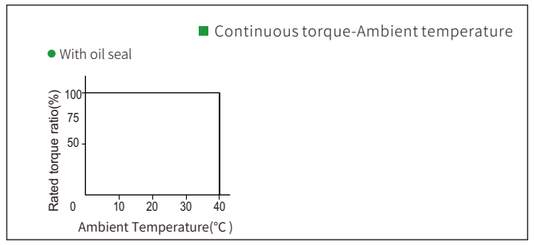


## External dimensions

### MH MH150A

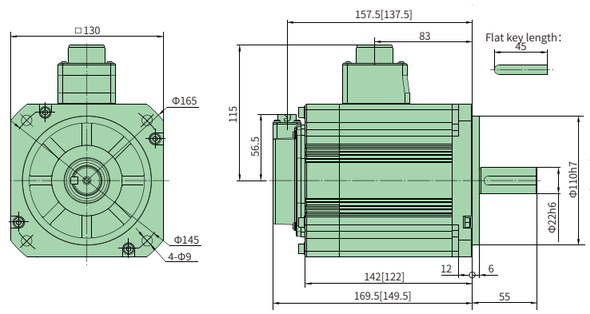


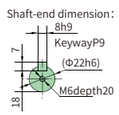


● Dimension with parentheses( ) show the motor length with no brake.

# MH150A High inertia [leadwire type]


| Rated voltage |
|---|
| AC220V |

| Rated output |
|---|
| 1500W |

| Motor type |
|---|
| MH High inertia |

| Flange size |
|---|
| ☐ 130mm |

## Specifications

| Items | | Specifications |
|---|---|---|
| Model Name | M□□□□□2□□ | 1.5KW/High inertia /MH100A |
| Fitting flange size | (mm) | 130 |
| Approximate mass (no brake) | (Kg) | 7.37 |
| Approximate mass (with brake) | (Kg) | 8.97 |
| Rated voltage | (V) | AC220 |
| Rated output | (W) | 1500 |
| Rated torque | (N.m) | 7.16 |
| Instantaneous max. torque | (N.m) | 21.5 |
| Rated current | (Arms) | 8 |
| Instantaneous max. current | (Arms) | 24 |
| Rated speed | (r/min) | 2000 |
| Max. speed | (r/min) | 3000 |
| Torque constant | (N.m/A) | 0.895 |
| Induced voltage constant per phase | MV(r/min) | 34.84 |
| Rated power rate (KW/S) | No brake | 15.4 |
| | With brake | 14.8 |
| Mechanical time constant (ms) | No brake | 5.15 |
| | With brake | 5.34 |
| Electrical time constant | (ms) | 12.7 |
| Moment of inertia $x10^{-4}Kg.m^2$ | No brake | 33.4 |
| | With brake | 34.6 |

## Brake specification

| Brake specification | Unit | parameter |
|---|---|---|
| Usage | – | Holding brake |
| Rated voltage | V | DC24V ±10% |
| Rated current | A | 0.9 |
| Static friction torque | Nm | 14or more |
| Suction time | ms | 100or less |
| Release time | ms | 60or less |
| Release voltage | v | DC1Vor more |

## Permissible load

| Permissible load | | |
|---|---|---|
| | Radial load(N) | 490 |
| | Axial load(N) | 196 |

Notes: The □□ in the model name indicates the motor structure.

## Torque characteristics

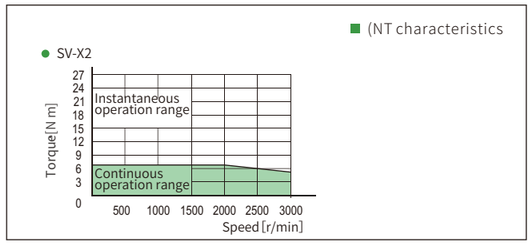


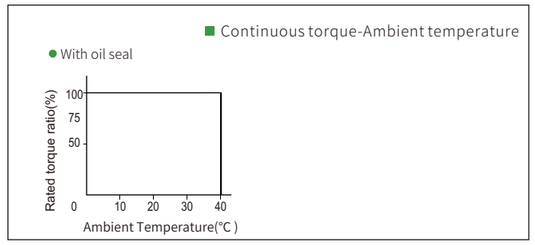


## External dimensions

### MH MH150A

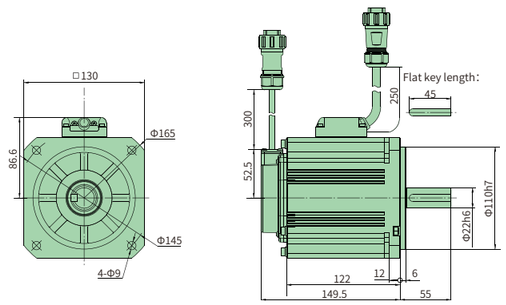


- Dimension with parentheses( ) show the motor length with no brake.

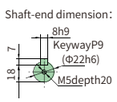








# MG085B Low-speed & high-torque[Connector type]


| Rated voltage |
|---|
| AC220V |

| Rated output |
|---|
| 850W |

| Motor type |
|---|
| Low-speed & high-torque |

| Flange size |
|---|
| ☐ 130mm |

## Specifications

| Items | | Specifications |
|---|---|---|
| Model Name | M□□□□□2□□ | 850W/Low-speed & high-torque/MG085B |
| Fitting flange size | (mm) | 130 |
| Approximate mass (no brake) | (Kg) | 4.67 |
| Approximate mass (with brake) | (Kg) | 6.27 |
| Rated voltage | (V) | AC220 |
| Rated output | (W) | 850 |
| Rated torque | (N.m) | 5.41 |
| Instantaneous max. torque | (N.m) | 16.2 |
| Rated current | (Arms) | 5.9 |
| Instantaneous max. current | (Arms) | 18 |
| Rated speed | (r/min) | 1500 |
| Max. speed | (r/min) | 3000 |
| Torque constant | (N.m/A) | 0.918 |
| Induced voltage constant per phase | MV(r/min) | 33.65 |
| Rated power rate (KW/S) | No brake | 47.4 |
| | With brake | 39.6 |
| Mechanical time constant (ms) | No brake | 1.76 |
| | With brake | 2.11 |
| Electrical time constant | (ms) | 9.5 |
| Moment of inertia $x10^{-4}Kg.m^2$ | No brake | 6.18 |
| | With brake | 7.4 |

## Brake specification

| Brake specification | Unit | parameter |
|---|---|---|
| Usage | – | Holding brake |
| Rated voltage | V | DC24V ±10% |
| Rated current | A | 0.9 |
| Static friction torque | Nm | 14or more |
| Suction time | ms | 100or less |
| Release time | ms | 60or less |
| Release voltage | v | DC1Vor more |

## Permissible load

| Permissible load | | |
|---|---|---|
| | Radial load(N) | 490 |
| | Axial load(N) | 196 |

Notes: The □□ in the model name indicates the motor structure.

## Torque characteristics

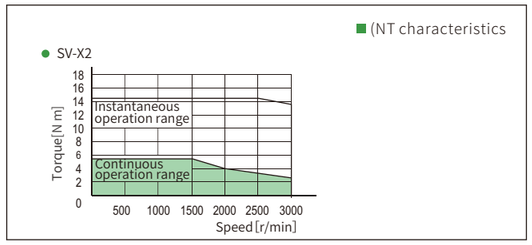


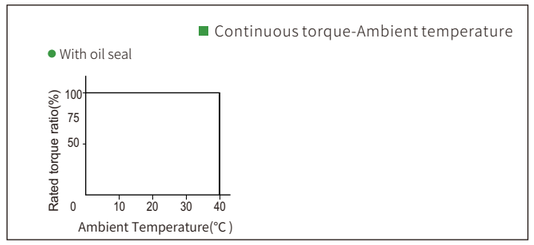


## External dimensions

### MG MG085B

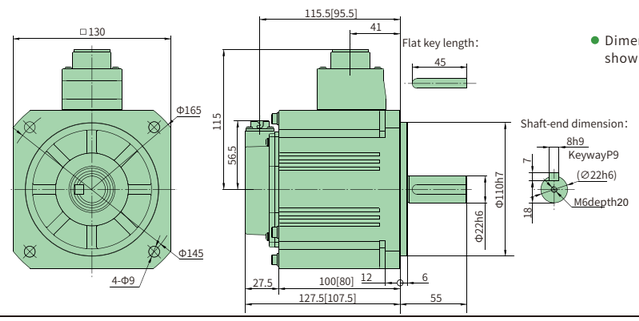


- Dimension with parentheses( ) show the motor length with no brake.

# MG085B Low-speed & high-torque[leadwire type]


| Rated voltage |
|---|
| AC220V |

| Rated output |
|---|
| 850W |

| Motor type |
|---|
| Low-speed & high-torque |

| Flange size |
|---|
| □ 130mm |

## Specifications

| Items | | Specifications |
|---|---|---|
| Model Name | M□□□□□2□□ | 850W/Low-speed & high-torque/MG085B |
| Fitting flange size | (mm) | 130 |
| Approximate mass (no brake) | (Kg) | 4.67 |
| Approximate mass (with brake) | (Kg) | 6.27 |
| Rated voltage | (V) | AC220 |
| Rated output | (W) | 850 |
| Rated torque | (N.m) | 5.41 |
| Instantaneous max. torque | (N.m) | 16.2 |
| Rated current | (Arms) | 5.9 |
| Instantaneous max. current | (Arms) | 18 |
| Rated speed | (r/min) | 1500 |
| Max. speed | (r/min) | 3000 |
| Torque constant | (N.m/A) | 0.918 |
| Induced voltage constant per phase | MV(r/min) | 33.65 |
| Rated power rate (KW/S) | No brake | 47.4 |
| | With brake | 39.6 |
| Mechanical time constant (ms) | No brake | 1.76 |
| | With brake | 2.11 |
| Electrical time constant | (ms) | 9.5 |
| Moment of inertia $x10^{-4}Kg.m^2$ | No brake | 6.18 |
| | With brake | 7.4 |

## Brake specification

| Brake specification | Unit | parameter |
|---|---|---|
| Usage | – | Holding brake |
| Rated voltage | V | DC24V ±10% |
| Rated current | A | 0.9 |
| Static friction torque | Nm | 14or more |
| Suction time | ms | 100or less |
| Release time | ms | 60or less |
| Release voltage | v | DC1Vor more |

## Permissible load

| Permissible load | | |
|---|---|---|
| | Radial load(N) | 490 |
| | Axial load(N) | 196 |

Notes: The □□ in the model name indicates the motor structure.

## Torque characteristics

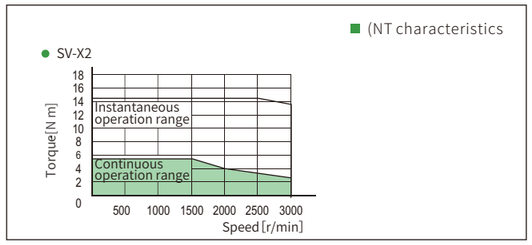


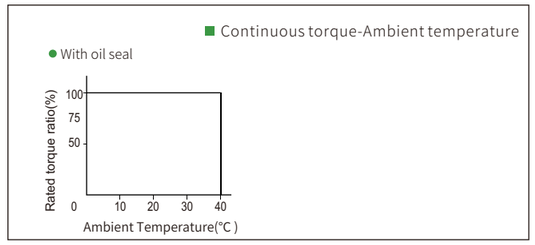


## External dimensions

### MG085B

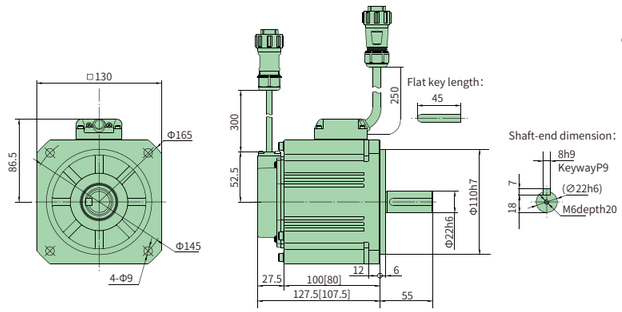


- Dimension with parentheses( ) show the motor length with no brake.





# MG130B Low-speed & high-torque[Connector type]


| Rated voltage |
|---|
| AC220V |

| Rated output |
|---|
| 1300W |

| Motor type |
|---|
| Low-speed & high-torque |

| Flange size |
|---|
| □ 130mm |

## Specifications

| Items | | Specifications |
|---|---|---|
| Model Name | M□□□□□2□□ | 1.3KWLow-speed & high-torque/MG130B |
| Fitting flange size | (mm) | 130 |
| Approximate mass (no brake) | (Kg) | 5.87 |
| Approximate mass (with brake) | (Kg) | 7.47 |
| Rated voltage | (V) | AC220 |
| Rated output | (W) | 1300 |
| Rated torque | (N.m) | 8.28 |
| Instantaneous max. torque | (N.m) | 24.84 |
| Rated current | (Arms) | 9.3 |
| Instantaneous max. current | (Arms) | 28 |
| Rated speed | (r/min) | 1500 |
| Max. speed | (r/min) | 3000 |
| Torque constant | (N.m/A) | 0.895 |
| Induced voltage constant per phase | MV(r/min) | 34.84 |
| Rated power rate (KW/S) | No brake | 74.8 |
| | With brake | 75.9 |
| Mechanical time constant (ms) | No brake | 1.41 |
| | With brake | 1.6 |
| Electrical time constant | (ms) | 12.7 |
| Moment of inertia $x10^{-4}Kg.m^2$ | No brake | 9.16 |
| | With brake | 10.4 |

## Brake specification

| Brake specification | Unit | parameter |
|---|---|---|
| Usage | – | Holding brake |
| Rated voltage | V | DC24V ±10% |
| Rated current | A | 0.9 |
| Static friction torque | Nm | 14or more |
| Suction time | ms | 100or less |
| Release time | ms | 60or less |
| Release voltage | v | DC1Vor more |

## Permissible load

| Permissible load | | |
|---|---|---|
| | Radial load(N) | 490 |
| | Axial load(N) | 196 |

Notes: The □□ in the model name indicates the motor structure.

## Torque characteristics

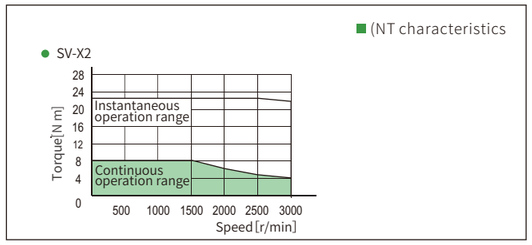


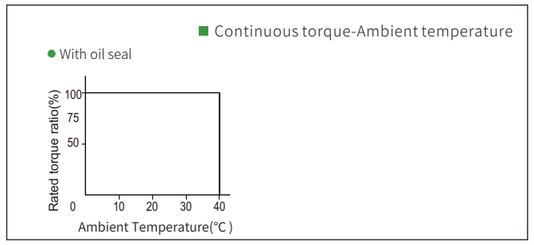


## External dimensions

### MG130B

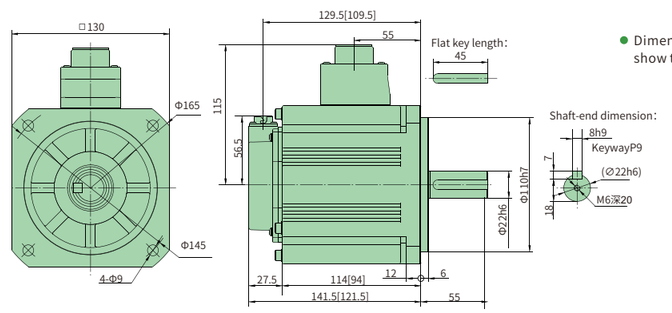


- Dimension with parentheses( ) show the motor length with no brake.

# MG130B Low-speed & high-torque[leadwire type]


| Rated voltage |
|---|
| AC220V |

| Rated output |
|---|
| 1300W |

| Motor type |
|---|
| Low-speed & high-torque |

| Flange size |
|---|
| ☐ 130mm |

## Specifications

| Items | | Specifications |
|---|---|---|
| Model Name | M□□□□□2□□ | 1300W/Low-speed & high-torque/MG130B |
| Fitting flange size | (mm) | 130 |
| Approximate mass (no brake) | (Kg) | 5.87 |
| Approximate mass (with brake) | (Kg) | 7.47 |
| Rated voltage | (V) | AC220 |
| Rated output | (W) | 1300 |
| Rated torque | (N.m) | 8.28 |
| Instantaneous max. torque | (N.m) | 24.84 |
| Rated current | (Arms) | 9.3 |
| Instantaneous max. current | (Arms) | 28 |
| Rated speed | (r/min) | 1500 |
| Max. speed | (r/min) | 3000 |
| Torque constant | (N.m/A) | 0.895 |
| Induced voltage constant per phase | MV(r/min) | 34.84 |
| Rated power rate (KW/S) | No brake | 74.8 |
| | With brake | 75.9 |
| Mechanical time constant (ms) | No brake | 1.41 |
| | With brake | 1.6 |
| Electrical time constant | (ms) | 12.7 |
| Moment of inertia $x10^{-4}Kg.m^2$ | No brake | 9.16 |
| | With brake | 10.4 |

## Brake specification

| Brake specification | Unit | parameter |
|---|---|---|
| Usage | – | Holding brake |
| Rated voltage | V | DC24V ±10% |
| Rated current | A | 0.9 |
| Static friction torque | Nm | 14or more |
| Suction time | ms | 100or less |
| Release time | ms | 60or less |
| Release voltage | v | DC1Vor more |

## Permissible load

| Permissible load | | |
|---|---|---|
| | Radial load(N) | 490 |
| | Axial load(N) | 196 |

Notes: The □□ in the model name indicates the motor structure.

## Torque characteristics

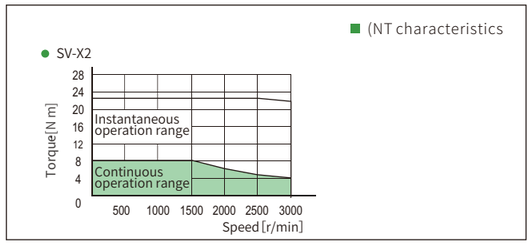


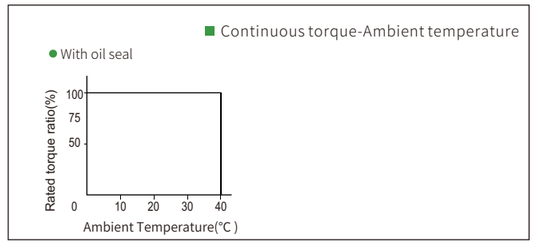


## External dimensions

### MG MG130B

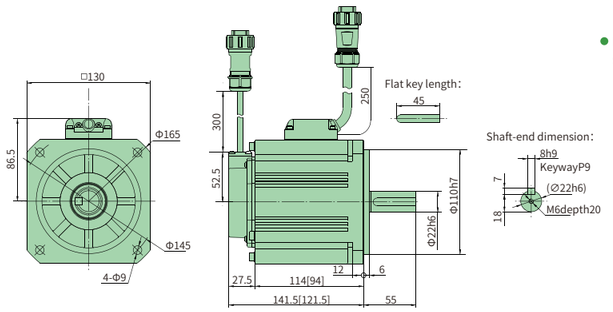


● Dimension with parentheses( ) show the motor length with no brake.







# MG180B Low-speed & high-torque[Connector type]


| Rated voltage |
|---|
| AC220V |

| Rated output |
|---|
| 1800W |

| Motor type |
|---|
| Low-speed & high-torque |

| Flange size |
|---|
| ☐ 130mm |

## Specifications

| Items | | Specifications |
|---|---|---|
| Model Name | M□□□□□2□□ | 1.8KW/Low-speed & high-torque/MG180B |
| Fitting flange size | (mm) | 130 |
| Approximate mass (no brake) | (Kg) | 6.98 |
| Approximate mass (with brake) | (Kg) | 8.58 |
| Rated voltage | (V) | AC220 |
| Rated output | (W) | 1800 |
| Rated torque | (N.m) | 11.5 |
| Instantaneous max. torque | (N.m) | 34.5 |
| Rated current | (Arms) | 11.8 |
| Instantaneous max. current | (Arms) | 35.5 |
| Rated speed | (r/min) | 1500 |
| Max. speed | (r/min) | 3000 |
| Torque constant | (N.m/A) | 0.9645 |
| Induced voltage constant per phase | MV(r/min) | 40.18 |
| Rated power rate (KW/S) | No brake | 109 |
| | With brake | 98.7 |
| Mechanical time constant (ms) | No brake | 0.91 |
| | With brake | 1.0 |
| Electrical time constant | (ms) | 13. 88 |
| Moment of inertia $x10^{-4}Kg.m^2$ | No brake | 12.1 |
| | With brake | 13.3 |

## Brake specification

| Brake specification | Unit | parameter |
|---|---|---|
| Usage | – | Holding brake |
| Rated voltage | V | DC24V ±10% |
| Rated current | A | 0.9 |
| Static friction torque | Nm | 14or more |
| Suction time | ms | 100or less |
| Release time | ms | 60or less |
| Release voltage | v | DC1Vor more |

## Permissible load

| Permissible load | | |
|---|---|---|
| | Radial load(N) | 490 |
| | Axial load(N) | 196 |

Notes: The □□ in the model name indicates the motor structure.

## Torque characteristics

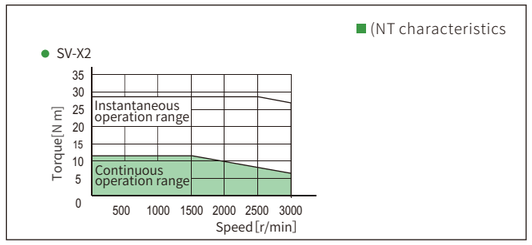


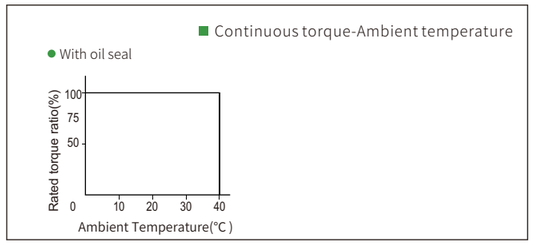


## External dimensions

### MG MG180B

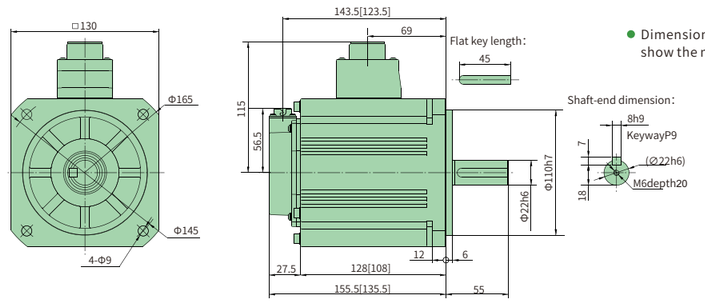


● Dimension with parentheses( ) show the motor length with no brake.

# MG180B Low-speed & high-torque[leadwire type]


| Rated voltage |
|---|
| AC220V |

| Rated output |
|---|
| 1800W |

| Motor type |
|---|
| MG Low-speed & high-torque |

| Flange size |
|---|
| ☐ 130mm |

## Specifications

| Items | | Specifications |
|---|---|---|
| Model Name | M□□□□□2□□ | 1800W/Low-speed & high-torque/MG180B |
| Fitting flange size | (mm) | 130 |
| Approximate mass (no brake) | (Kg) | 6.98 |
| Approximate mass (with brake) | (Kg) | 8.58 |
| Rated voltage | (V) | AC220 |
| Rated output | (W) | 1800 |
| Rated torque | (N.m) | 11.5 |
| Instantaneous max. torque | (N.m) | 34.5 |
| Rated current | (Arms) | 11.8 |
| Instantaneous max. current | (Arms) | 35.5 |
| Rated speed | (r/min) | 1500 |
| Max. speed | (r/min) | 3000 |
| Torque constant | (N.m/A) | 0.9645 |
| Induced voltage constant per phase | MV(r/min) | 40.18 |
| Rated power rate (KW/S) | No brake | 109 |
| | With brake | 98.7 |
| Mechanical time constant (ms) | No brake | 0.91 |
| | With brake | 1.0 |
| Electrical time constant | (ms) | 13. 88 |
| Moment of inertia $x10^{-4}Kg.m^2$ | No brake | 12.1 |
| | With brake | 13.3 |

## Brake specification

| Brake specification | Unit | parameter |
|---|---|---|
| Usage | – | Holding brake |
| Rated voltage | V | DC24V ±10% |
| Rated current | A | 0.9 |
| Static friction torque | Nm | 14or more |
| Suction time | ms | 100or less |
| Release time | ms | 60or less |
| Release voltage | v | DC1V or more |

## Permissible load

| Permissible load | | |
|---|---|---|
| | Radial load(N) | 490 |
| | Axial load(N) | 196 |

Notes: The □□ in the model name indicates the motor structure.

## Torque characteristics

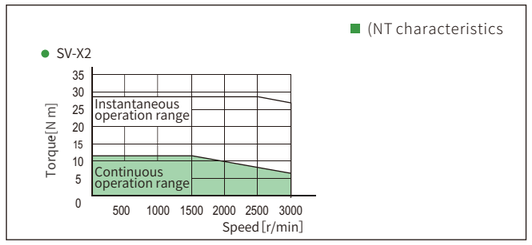


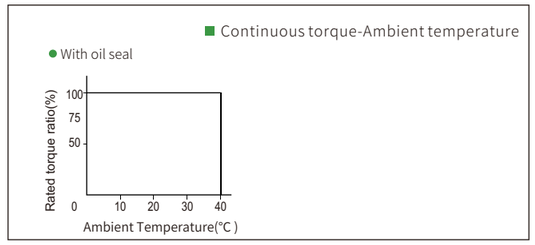


## External dimensions

### MG MG180B

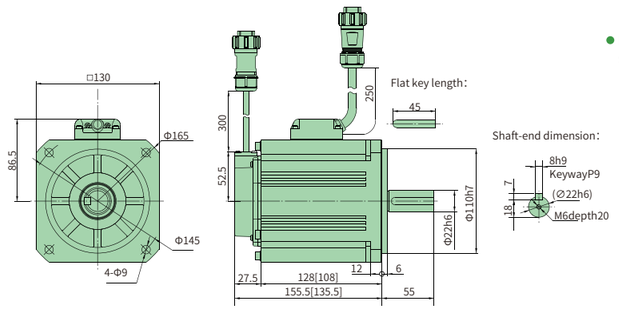


- Dimension with parentheses( ) show the motor length with no brake.







# MG075A [leadwire type]


| Rated voltage |
|---|
| AC220V |

| Rated output |
|---|
| 750W |

| Motor type |
|---|
| MG Low-speed & high-torque |

| Flange size |
|---|
| ☐ 80mm |

## Specifications

| Items | | Specifications |
|---|---|---|
| Model Name | M□□□□□2□□ | 750W/Low-speed & high-torque/MG075A |
| Fitting flange size | (mm) | 80 |
| Approximate mass (no brake) | (Kg) | 3.46 |
| Approximate mass (with brake) | (Kg) | - |
| Rated voltage | (V) | AC220 |
| Rated output | (W) | 750 |
| Rated torque | (N.m) | 4.77 |
| Instantaneous max. torque | (N.m) | 14.3 |
| Rated current | (Arms) | 4.2 |
| Instantaneous max. current | (Arms) | 15 |
| Rated speed | (r/min) | 1500 |
| Max. speed | (r/min) | 2000 |
| Torque constant | (N.m/A) | 1.135 |
| Induced voltage constant per phase | MV(r/min) | 41.6 |
| Rated power rate (KW/S) | No brake | 77.1 |
| | With brake | - |
| Mechanical time constant (ms) | No brake | 73.1 |
| | With brake | - |
| Electrical time constant | (ms) | 6.2 |
| Moment of inertia $x10^{-4}Kg.m^2$ | No brake | 2.88 |
| | With brake | - |

## Brake specification

| Brake specification | Unit | parameter |
|---|---|---|
| Usage | – | Holding brake |
| Rated voltage | V | DC24V ±10% |
| Rated current | A | 0.42 |
| Static friction torque | Nm | 3.8or more |
| Suction time | ms | 70or less |
| Release time | ms | 20or less |
| Release voltage | v | DC1Vor more |

## Permissible load

| Permissible load | | |
|---|---|---|
| | Radial load(N) | 392 |
| | Axial load(N) | 147 |

Notes: The □□ in the model name indicates the motor structure.

## Torque characteristics

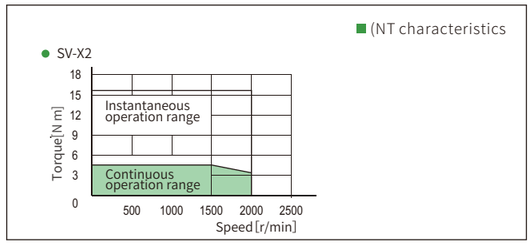


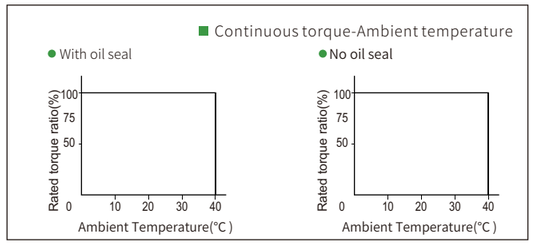


## External dimensions

### MG MG075A-N2LN

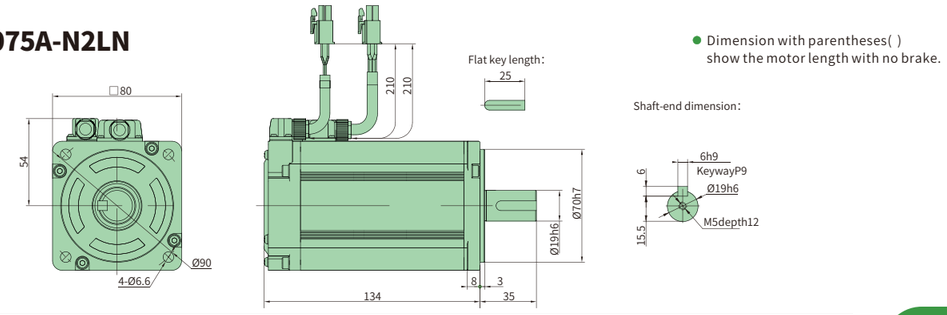


- Dimension with parentheses( ) show the motor length with no brake.

# MG100A Connector type

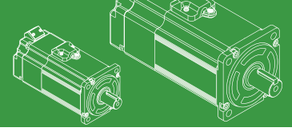


| Rated voltage |
|---|
| AC220V |

| Rated output |
|---|
| 1000W |

| Motor type |
|---|
| MGLow-speed & high-torque |

| Flange size |
|---|
| □ 130mm |

## Specifications

| Items | | Specifications |
|---|---|---|
| Model Name | M□□□□□2□□ | 1KW/Low-speed & high-torque/MG100A |
| Fitting flange size | (mm) | 130 |
| Approximate mass (no brake) | (Kg) | 6.91 |
| Approximate mass (with brake) | (Kg) | - |
| Rated voltage | (V) | AC220 |
| Rated output | (W) | 1000 |
| Rated torque | (N.m) | 9.55 |
| Instantaneous max. torque | (N.m) | 28.6 |
| Rated current | (Arms) | 5.2 |
| Instantaneous max. current | (Arms) | 16 |
| Rated speed | (r/min) | 1000 |
| Max. speed | (r/min) | 1500 |
| Torque constant | (N.m/A) | 1.83 |
| Induced voltage constant per phase | MV(r/min) | 67.3 |
| Rated power rate (KW/S) | No brake | 75.4 |
| | With brake | 68.6 |
| Mechanical time constant (ms) | No brake | 1.24 |
| | With brake | 1.37 |
| Electrical time constant | (ms) | 7.6 |
| Moment of inertia $x10^{-4}Kg.m^2$ | No brake | 12.1 |
| | With brake | |

## Brake specification

| Brake specification | Unit | parameter |
|---|---|---|
| Usage | – | Holding brake |
| Rated voltage | V | DC24V ±10% |
| Rated current | A | 0.9 |
| Static friction torque | Nm | 14or more |
| Suction time | ms | 100or less |
| Release time | ms | 60or less |
| Release voltage | v | DC1Vor more |

## Permissible load

| | | |
|---|---|---|
| Permissible load | Radial load(N) | 490 |
| | Axial load(N) | 160 |

Notes: The □□ in the model name indicates the motor structure.

## Torque characteristics

■ (NT characteristics

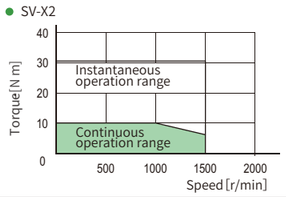


■ Continuous torque-Ambient temperature

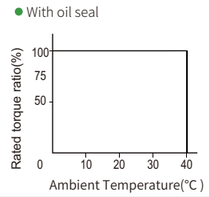


## External dimensions

**MG100A**

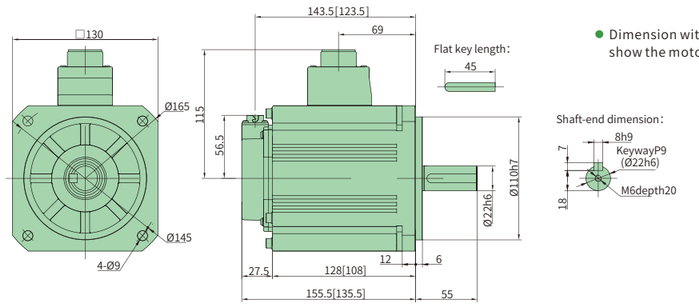


● Dimension with parentheses( ) show the motor length with no brake.





## MEMO

## Servo Drives

# Selection Guide

- Full range of power
- High response, high extension and high communication compatibility
- Flexible motor matching, high ease of use
- Support customization functions

### SV-X3E Series Servo Drive

| Model name | Specifications | | |
|---|---|---|---|
| SV-X3EA005A-A2 | Matching motor power 50W | Standard type | Single-phase 200VAC input |
| SV-X3EA010A-A2 | Matching motor power 100W | | |
| SV-X3EA020A-A2 | Matching motor power 200W | | |
| SV-X3EA040A-A2 | Matching motor power 400W | | |
| SV-X3EA075A-A2 | Matching motor power 750W | | |
| SV-X3EA100A-A2 | Matching motor power 1KW | | Three-phase 200VAC input |
| SV-X3EA150A-A2 | Matching motor power 1.5KW | | |
| SV-X3EA200A-A2 | Matching motor power 2KW | | |
| SV-X3EA250A-A2 | Matching motor power 2.5KW | | |
| SV-X3EN005A-A2 | Matching motor power 50W | CAN open type | Single-phase 200VAC input |
| SV-X3EN010A-A2 | Matching motor power 100W | | |
| SV-X3EN020A-A2 | Matching motor power 200W | | |
| SV-X3EN040A-A2 | Matching motor power 400W | | |
| SV-X3EN075A-A2 | Matching motor power 750W | | |
| SV-X3EN100A-A2 | Matching motor power 1KW | | Three-phase 200VAC input |
| SV-X3EN150A-A2 | Matching motor power 1.5KW | | |
| SV-X3EN200A-A2 | Matching motor power 2KW | | |
| SV-X3EA010A-A2-PG005 | Matching motor power 100W | Gantry synchronization type | Single-phase 200VAC input |
| SV-X3EA020A-A2-PG005 | Matching motor power 200W | | |
| SV-X3EA040A-A2-PG005 | Matching motor power 400W | | |
| SV-X3EA075A-A2-PG005 | Matching motor power 750W | | Three-phase 200VAC input |
| SV-X3EA100A-A2-PG005 | Matching motor power 1KW | | |
| SV-X3EA150A-A2-PG005 | Matching motor power 1.5KW | | |
| SV-X3EA200A-A2-PG005 | Matching motor power 2KW | | |
| SV-X3EA010A-A-AO | Matching motor power 100W | Analog output type | Single-phase 200VAC input |
| SV-X3EA020A-A-AO | Matching motor power 200W | | |
| SV-X3EA040A-A-AO | Matching motor power 400W | | |
| SV-X3EA075A-A-AO | Matching motor power 750W | | Three-phase 200VAC input |
| SV-X3EA100A-A-AO | Matching motor power 1KW | | |
| SV-X3EA150A-A-AO | Matching motor power 1.5KW | | |
| SV-X3EA200A-A-AO | Matching motor power 2KW | | |
| SV-X3EA005A-A2-PG000 | Matching motor power 50W | Full-closed type | Single-phase 200VAC input |
| SV-X3EA010A-A2-PG000 | Matching motor power 100W | | |
| SV-X3EA020A-A2-PG000 | Matching motor power 200W | | |
| SV-X3EA040A-A2-PG000 | Matching motor power 400W | | |
| SV-X3EA075A-A2-PG000 | Matching motor power 750W | | Three-phase 200VAC input |
| SV-X3EA100A-A2-PG000 | Matching motor power 1KW | | |
| SV-X3EA150A-A2-PG000 | Matching motor power 1.5KW | | |
| SV-X3EA200A-A2-PG000 | Matching motor power 2KW | | |
| SV-X3EB005A-A2 | Matching motor power 50W | Ether CAT type | Single-phase 200VAC input |
| SV-X3EB010A-A2 | Matching motor power 100W | | |
| SV-X3EB020A-A2 | Matching motor power 200W | | |
| SV-X3EB040A-A2 | Matching motor power 400W | | |
| SV-X3EB075A-A2 | Matching motor power 750W | | Three-phase 200VAC input |
| SV-X3EB100A-A2 | Matching motor power 1KW | | |
| SV-X3EB150A-A2 | Matching motor power 1.5KW | | |
| SV-X3EB200A-A2 | Matching motor power 2KW | | |
| SV-X3EB250A-A2 | Matching motor power 2.5KW | | |







### SV-X2E Series Servo Drive

| Model name | Specifications | | |
|---|---|---|---|
| SV-X2EA005A-A | Matching motor power 50W | Standard type | Single-phase 200VAC input |
| SV-X2EA010A-A | Matching motor power 100W | | |
| SV-X2EA020A-A | Matching motor power 200W | | |
| SV-X2EA040A-A | Matching motor power 400W | | |
| SV-X2EA075A-A | Matching motor power 750W | | |
| SV-X2EA100A-A | Matching motor power 1KW | | |
| SV-X2EN005A-A | Matching motor power 50W | CAN open type | Single-phase 200VAC input |
| SV-X2EN010A-A | Matching motor power 100W | | |
| SV-X2EN020A-A | Matching motor power 200W | | |
| SV-X2EN040A-A | Matching motor power 400W | | |
| SV-X2EN075A-A | Matching motor power 750W | | |
| SV-X2EN100A-A | Matching motor power 1KW | | |
| SV-X2EA150A-A | Matching motor power 1.5KW | Standard type | Three-phase 200VAC input |
| SV-X2EA200A-A | Matching motor power 2KW | | Three-phase 200VAC input |
| SV-X2EA250A-A | Matching motor power 2.5KW | | Three-phase 200VAC input |
| SV-X2EN150A-A | Matching motor power 1.5KW | CAN open type | Three-phase 200VAC input |
| SV-X2EN200A-A | Matching motor power 2KW | | Three-phase 200VAC input |
| SV-X2EN250A-A | Matching motor power 2.5KW | | Three-phase 200VAC input |

## Servo Motors Series

# Selection Guide

- New framework
- Full range of inertia/rotation speed
- Support low-speed/high-torque, high-precision encoder
- Superior raw material supplier

### SV-X2 Series Servo Motor

| power | Model name | Keyway shaft | With/no brake | Oil seal | 17-bit encoder | | Shaft diameter | Inertia | | |
|---|---|---|---|---|---|---|---|---|---|---|
| | | | | | Incremental | Absolute | | Low | Middle | High |
| 50W | SV-X2MH005A-N2LN | □ | × | ● | ○ | – | ϕ8 | – | – | ◎ |
| | SV-X2MH005A-N2LA | □ | × | ● | – | ○ | ϕ8 | – | – | ◎ |
| | SV-X2MH005A-B2LA | □ | ● | ● | – | ○ | ϕ8 | – | – | ◎ |
| | SV-X2MH005A-B2LN | □ | ● | ● | ○ | – | ϕ8 | – | – | ◎ |
| 100W | SV-X2MH010A-N2LN | □ | × | ● | ○ | – | ϕ8 | – | – | ◎ |
| | SV-X2MH010A-B2LN | □ | ● | ● | ○ | – | ϕ8 | – | – | ◎ |
| | SV-X2MH010A-N2LA | □ | × | ● | – | ○ | ϕ8 | – | – | ◎ |
| | SV-X2MH010A-B2LA | □ | ● | ● | – | ○ | ϕ8 | – | – | ◎ |
| 200W | SVLN020A-N2MH-X2 | □ | × | ● | ○ | – | ϕ14 | – | – | ◎ |
| | SVLN020A-B2MH-X2 | □ | ● | ● | ○ | – | ϕ14 | – | – | ◎ |
| | SVLA020A-N2MH-X2 | □ | × | ● | – | ○ | ϕ14 | – | – | ◎ |
| | SVLA020A-B2MH-X2 | □ | ● | ● | – | ○ | ϕ14 | – | – | ◎ |
| | SV020A-N2MH-X2JN | □ | × | ● | ○ | – | ϕ11 | – | – | ◎ |
| | SV-X2MH020A-N2JA | □ | × | ● | – | ○ | ϕ11 | – | – | ◎ |
| | SV-X2MH020A-B2JA | □ | ● | ● | – | ○ | ϕ11 | – | – | ◎ |
| | SV-X2MH020A-B2JN | □ | ● | ● | ○ | – | ϕ11 | – | – | ◎ |
| 400W | SV-X2MH040A-N2LN | □ | × | ● | ○ | – | ϕ14 | – | – | ◎ |
| | SV-X2MH040A-B2LN | □ | ● | ● | ○ | – | ϕ14 | – | – | ◎ |
| | SV-X2MH040A-N2LA | □ | × | ● | – | ○ | ϕ14 | – | – | ◎ |
| | SV-X2MH040A-B2LA | □ | ● | ● | – | ○ | ϕ14 | – | – | ◎ |
| 750W | SVLN075A-N2MH-X2 | □ | × | ● | ○ | – | ϕ19 | – | – | ◎ |
| | SVLN075A-B2MH-X2 | □ | ● | ● | ○ | – | ϕ19 | – | – | ◎ |
| | SVLA075A-N2MH-X2 | □ | × | ● | – | ○ | ϕ19 | – | – | ◎ |
| | SV075A-B2MH-X2LA | □ | ● | ● | – | ○ | ϕ19 | – | – | ◎ |
| 1KW | SV-X2MH100C-N2LN | □ | × | ● | ○ | – | ϕ19 | – | – | ◎ |
| | SV-X2MH100C-B2LN | □ | ● | ● | ○ | – | ϕ19 | – | – | ◎ |
| | SV-X2MH100C-N2LA | □ | × | ● | – | ○ | ϕ19 | – | – | ◎ |
| | SV-X2MH100C-B2LA | □ | ● | ● | – | ○ | ϕ19 | – | – | ◎ |
| | SV-X2MM100A-N2LA | □ | × | ● | – | ○ | ϕ22 | – | ◎ | – |
| | SV-X2MM100A-N2LN | □ | × | ● | ○ | – | ϕ22 | – | ◎ | – |
| | SV-X2MM100A-B2LA | □ | ● | ● | – | ○ | ϕ22 | – | ◎ | – |
| | SV-X2MM100A-B2LN | □ | ● | ● | ○ | – | ϕ22 | – | ◎ | – |
| | SV-X2MH100A-N2LA | □ | × | ● | – | ○ | ϕ22 | – | – | ◎ |
| | SV-X2MH100A-N2LN | □ | × | ● | ○ | – | ϕ22 | – | – | ◎ |
| | SV-X2MH100A-B2LA | □ | ● | ● | – | ○ | ϕ22 | – | – | ◎ |
| | SV-X2MH100A-B2LN | □ | ● | ● | ○ | – | ϕ22 | – | – | ◎ |
| 1.5KW | SV-X2MM150A-N2LA | □ | × | ● | – | ○ | ϕ22 | – | ◎ | – |
| | SV-X2MM150A-N2LN | □ | × | ● | ○ | – | ϕ22 | – | ◎ | – |
| | SV-X2MM150A-B2LA | □ | ● | ● | – | ○ | ϕ22 | – | ◎ | – |
| | SV-X2MM150A-B2LN | □ | ● | ● | ○ | – | ϕ22 | – | ◎ | – |
| | SV-X2MH150A-N2LA | □ | × | ● | – | ○ | ϕ22 | – | – | ◎ |
| | SV-X2MH150A-N2LN | □ | × | ● | ○ | – | ϕ22 | – | – | ◎ |
| | SV-X2MH150A-B2LN | □ | ● | ● | ○ | – | ϕ22 | – | – | ◎ |
| 2KW | SV-X2MM200A-N2LA | □ | × | ● | – | ○ | ϕ22 | – | ◎ | – |
| | SV-X2MM200A-N2LN | □ | × | ● | ○ | – | ϕ22 | – | ◎ | – |
| | SV-X2MM200A-B2LA | □ | ● | ● | – | ○ | ϕ22 | – | ◎ | – |
| | SV-X2MM200A-B2LN | □ | ● | ● | ○ | – | ϕ22 | – | ◎ | – |
| Low-speed & high-torque | SV-X2MG075A-N2LN | □ | × | ● | ○ | – | ϕ19 | – | – | – |
| | SV-X2MG100A-N2LN | □ | × | ● | ○ | – | ϕ19 | – | – | – |
| | SV-X2MG085B-N2LA | □ | × | ● | – | ○ | ϕ22 | – | – | – |
| | SV-X2MG085B-B2LA | □ | ● | ● | – | ○ | ϕ22 | – | – | – |
| | SV-X2MG130B-N2LA | □ | × | ● | – | ○ | ϕ22 | – | – | – |
| | SV-X2MG130B-B2LA | □ | ● | ● | – | ○ | ϕ22 | – | – | – |
| | SV-X2MG180B-N2LA | □ | × | ● | – | ○ | ϕ22 | – | – | – |
| | SV-X2MG180B-B2LA | □ | ● | ● | – | ○ | ϕ22 | – | – | – |

※ Plan to launch ● :With ○ :Built-in – :Not built-in ◎ :Belongs to □ :With keyway shaft × :Without

### Accessories for servos

| Specifications | Specifications |
|---|---|
| SVCAB-ENC75A-3M | X1/X3, X2/X6 series encoder cable for 750W or below, 3 meters |
| CAB-ENC75A-3M | X1/X3, X2/X6 series encoder cable for 750W or below, 3 meters |
| SVCAB-ENC75A-3M-F | X1/X3, X2/X6 series waterproof encoder cable for 750W or below, 3 meters |
| CAB-ENC100A-ABS-3M | X1/X3, X2/X6 series absolute encoder cable for 1KW or more(with battery pack), 3 meter |
| CAB-ENC100A-3M | X1/X3, X2/X6 series encoder cable for 1KW or above, 3 meters |
| SVCAB-ENC75C-5M | X2/X6 series encoder cable, for connector-type motor, 5 meters |
| CAB-ENC75C-5M | Power cable for X2/X6 series, for connector-type motor 200-750W |
| SVCAB-ENC005A-3M | X6 series encoder cable, for motor of 50W or less and low-voltage motor 48V |
| CAB-PWR75A-3M | X1/X3, X2/X6 series power cable for 750W or below, 3 meters |
| CAB-PWR75A-3M-F | X1/X3, X2/X6 series waterproof power cable for 750W or below, 3 meters |
| CAB-PWR75A-3M-48V | X2/X6 series power cable for 750W or below, for low-voltage motor 48V, 3 meters |
| CAB-PWR75A-3M-F-48V | X2/X6 series waterproof power cable for 750W or below,for low-voltage motor 48V, 3 meters |
| CAB-PWR10C-5M | X2/X6 series power cable for 750W or below, for connector-type motor, 5 meters |
| CAB-PWR75C-5M | X2/X6 series encoder cable, for connector-type motor, 5 meters |
| CAB-PWR100A-3M | X1/X3, X2/X6 series power cable for 1KW or above, 3 meters |
| CAB-PWR400C-3M | X2/X6 series power cable for 2KW to 5KW, 3 meters |
| CAB-PWR750C-5M | X2/X6 series power cable for 5.5KW to 7.5KW, 3 meters |
| CAB-PWR005A-3M | X6 series power cable for low-voltage motor 48V and 50W or less,3 meters |
| CAB-PWB75A-3M | X1/X3,X2/X6 series power brake cable for 1KW or more, 3 meters |
| CAB-PWB75A-3M-F | X1/X3,X2/X6 series waterproof power brake cable for 1KW or more, 3 meters |
| CAB-PWB75A-3M-48V | X2/X6 series power brake cable for 750W or less, for low-voltage motor 48V, 3 meters |
| CAB-PWB10C-5M | X2/X6 series power brake cable for 750W or less, for connector-type motor, 3 meters |
| CAB-PWB75C-5M | X2/X6 series power brake cable for 750W or less, for connector-type motor, 3 meters |
| CAB-PWD100A-3M | X1/X3, X2/X6 series 2-core brake cable, for 850W or more, 3 meters |
| CAB-PWB100A-3M | X2/X6 series 9-core power brake cable, for 850W or more, 3 meters |
| CAB-PWB100A-3M-F | X2/X6 series 9-core waterproof power brake cable, for 850W or more, 3 meters |
| SVBOX-ENCABS | X1/X3, X2/X6 series absolute battery box |
| ENC-TE 10-50W | X6 series encoder connector, for 50W or less and low-voltage 48V |
| ENC-TE 750W | X1/X3, X2/X6 series encoder connector, for 750W or less |
| ENC-TE 750W-F | X1/X3, X2/X6 series waterproof encoder connector, for 750W or less |
| ENC-TE 1KW | X1/X3, X2/X6 series encoder connector, for 850W or more |
| PWR-CON 10-50W | X6 series power connector, for 50W or less and low-voltage 48V |
| PWR-CON 750W | X1/X3, X2/X6 series power connector, for 750W or less |
| PWR-CON 750W-F | X1/X3, X2/X6 series waterproof power connector, for 750W or less |
| PWR-CON 1KW | X1/X3, X2/X6 series power connector, for 850W or more |
| PWR-CON 1KW-9P | X2/X6 series power brake connector, for 850W or more |
| PWR-CON 7.5KW | X2/X6 series power connector , for 2KW to 7.5KW |
| PWB-CON 750W | X1/X3, X2/X6 series brake connector, for 750W or less |
| PWB-CON 750W-F | X1/X3, X2/X6 series waterproof brake connector, for 750W or less |
| Magnetic ring | Anti-interference magnetic ring |
| SV-BRAKE-75A | Brake resistor for 750W or less |
| SV-BRAKE-100A | Brake resistor for 1KW or more |
| SV-CAB-0.3M | CAN bus connection cable |
| SV-ECAT-0.35M | X3T series connection cable |
| SV-ENC-BAT | Absolute battery board |
| SV-TR-120 | CAN terminal resistor |
| SV-RS485-0.2M | X6F series connection cable |
| SV-MIII-2M | X6F series connection cable |
| SV-STO-2M | X6F series connection cable |

※ Plan to launch ● :With ○ :Built-in – :Not built-in ◎ :Belongs to □ :With keyway shaft × :Without