NZ3000 Series Air Compressor Integrator
User Manual

Preface

Thank you for choosing the NZ3000 Series Air Compressor Integrator.

NZ3000 Series Air Compressor Integrator adopt metal plate, both for Floor standing and Wall mounted two ways to install, simple installation;

The wiring of product is simple debugging and easy to operate, including used Plug-in connector terminal and made the mistake-proof plug design.

High integration: DC current reactor is built-in, lower external interference,

Improve power factor; Built-in 220V AC power supply and over current-proof fuse transformer, supply 24V DC output; other built-in integrated PT100 and PTC detection circuit and protection circuit, etc. Using special software, no need to debug with HMI, Internet and other communication device and available for one button start.

This manual describes the NZ3000 Series Air Compressor Integrator of the basic information and guidance, please be sure to carefully read this manual prior to use.

Notice

Illustrations in this manual only for instruction maybe differ from the products you ordered.

We are committed to continuous improvement of products, the functions will be continue to upgrade, the information provided is subjected to change without prior notice.

If you have problems in using, please contact the company regional agents, please contact our customer service.

1. Basic specifications

Items		Specification
Basic control functions	Control mode	Open loop vector control, V/F control
	Upper frequency	Open loop vector control：0～300Hz，V/F control： 0～3200Hz
	Carrier frequency	0.5kHz～16kHz The carrier frequency is automatically adjusted based on the load features.
	Input frequency resolution	Digital setting：0.01Hz Analog setting：maximum frequency ×0.025%
	Startup torque	0.5Hz/150%
	Speed range	1：100
	Speed stability accuracy	±0.2%
	Torque control accuracy	±10%
	Overload capacity	60s for 150% of the rated current, 3s for 180% of the rated current.
	Torque boost	Auto torque boost；Manual torque boost 0.1%~30.0%
	V/F curve	3 ways：Straight-line V/F curve；Multi-point V/F curve; N-power V/F curve
	V/F separation	2 types： Complete separation; half separation
	Acceleration/deceleration curve	Line or the S-curve acceleration and deceleration； Four types acceleration and deceleration, Acceleration/deceleration time 0.0~6500.0s
	Communication/BUS	RS485
	JOG Control	Jog frequency range： 0.00Hz~50.00Hz.JOG acceleration/deceleration time 0.0s~6500.0s
	Built-in PID	It realizes process-controlled closed loop control system easily
	AUTO voltage（AVR）	It can keep constant output voltage automatically when the main voltage changes
	Frequency source	Given by digital
Input and output	Analog input	2 pressure sensors：input 4~20mA 2 temperature sensor：PT100
	Digital input	5 normal digital input; 1 PTC protection circuit (compatible with ordinary digital input)
	Digital output	2 way normally open relay output（built-in 220VAC voltage）
	LED display	Standard 3 LED display
Protection	Motor overheat protection（PTC），short circuit protection to ground at power-on，over current、over load、over voltage、under voltage、over heat、output phase shortage、Communication fault、Current detection fault、EEPROM reading/writing fault and so on.	
Fan inverter	15-55kW Master：1.5kW 75-160kW Master：2.2kW	
Environment	Applications	Indoor，avoid direct sunlight，dust、corrosive gas、combustible gas、oil, smoke vapor、drip or salt.
	Altitude	Lower than1000m
	Ambient temperature	－10℃~＋40℃（Lower the grades if the ambient temperature is between 40℃ and 50℃）
	Humidity	Less than 95%RH，without condensing

	Vibration	Less than 5.9m/s2（0.6g）
	Storage temperature	－20℃~＋60℃

2. Installation dimension

2.1 Floor-standing installation dimension

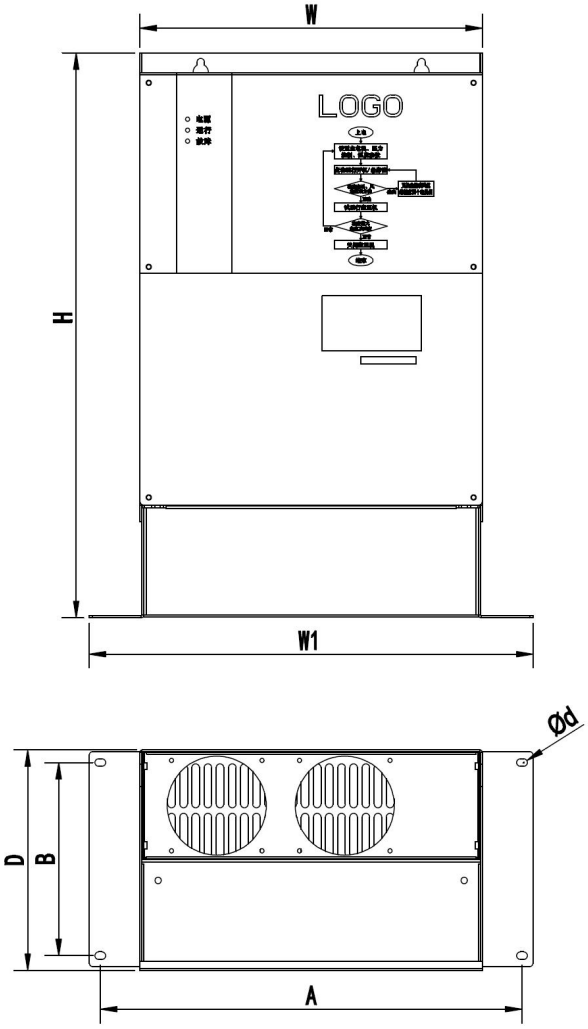

Model	Outline dimension(mm)				Installation size		Hole
	W	W1	H	D	A	B	d
NZ3000-22KY	200	237	455	180	220	155	7
NZ3000-37KY	310	402	540	200	382	175	7

3. Terminal defination

3.1 Main circuit terminal defination

Terminal Name	Function Description
R、S、T	Three-phase AC input terminals
U1、V1、W1	Master Three-phase AC output terminals
U2、V2、W2	Fan three-phase AC output terminals（Pluggable terminal）
PE	Grounding terminal

3.2 Control terminal definition and wiring

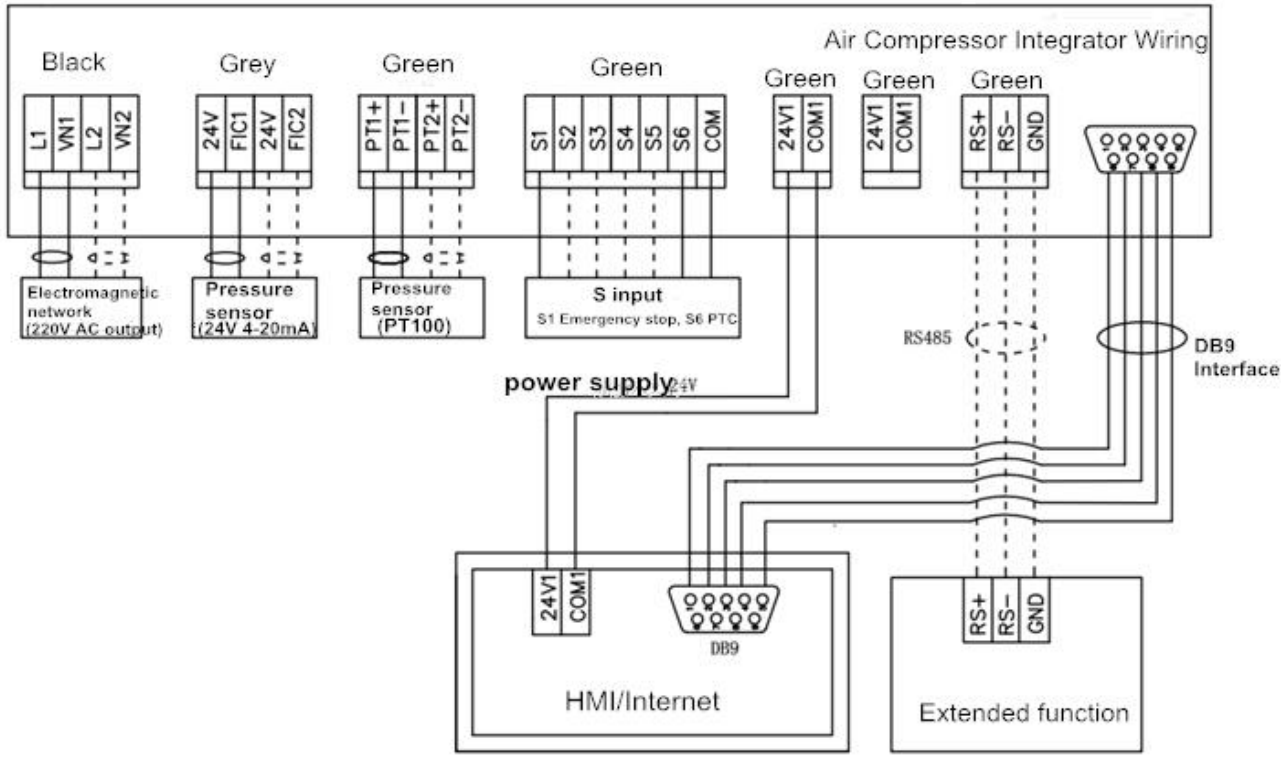

Note: 1) PT2+,PT2- is wiring terminals of Motor PT100, please short circuit without wiring, otherwise motor over heat fault.

2) S6 is terminal of Motor PTC, please short-circuit with COM without wiring (or setting P215=0), otherwise also will be motor over heat fault.

4. Debugging process

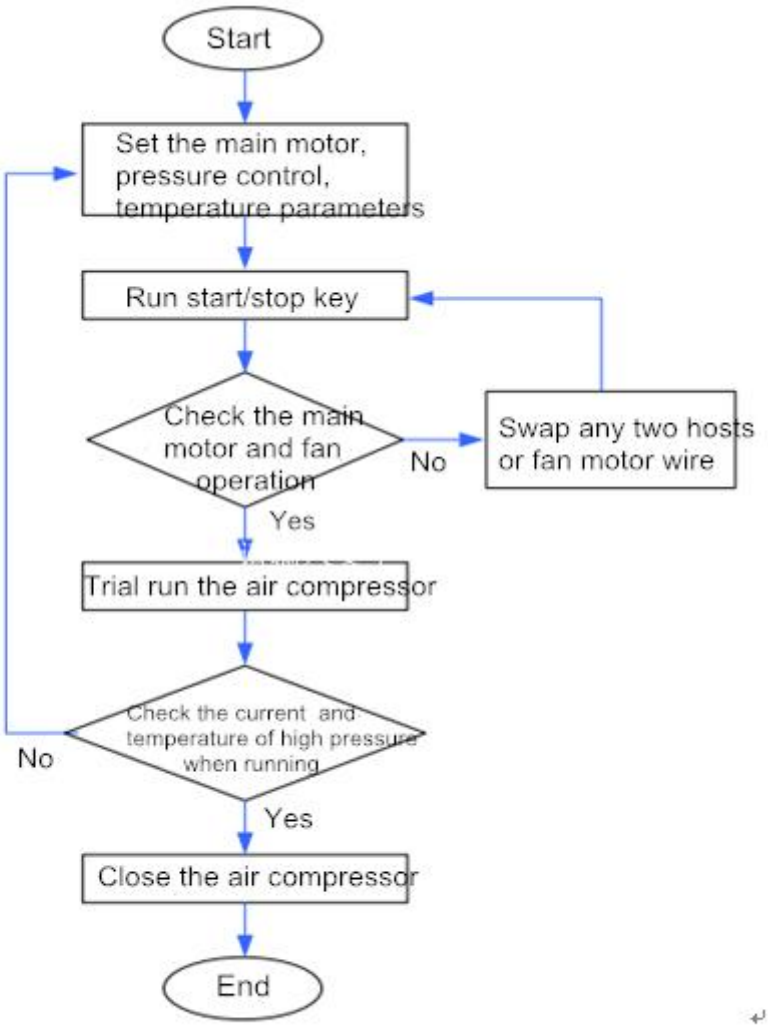

5 Function parameter

P0 group monitoring parameter			
Function code	Function	Precision	Data Type
P0.00	Display Option	0-32	RO
P0.01	Setting Frequency	0.01Hz	RO
P0.02	Output Frequency	0.1Hz	RO

P0.03	Output current	0.1A	RO
P0.04	Running RPM	1rpm	RO
P0.05	DCV	0.1V	RO
P0.06	Inverter Temperature	1℃	RO
P0.07	Pressure of Air Compressor	0.01MPa	RO
P0.08	Running Time	1hour	RO
P0.09	Output Voltage	0.1V	RO
P0.10	PID Stage Status	0： Delay Start 1： Delay loading 2： Running 3： releasing pressure 4： Under sleeping 10：Delay Stop 11：Stand by 12：Delay Reset 13：Failure Error	RO
P0.11	PID Timing each stage	1s	RO
P0.13	Die temperatures	1℃（PT1+/PT1-）	RO
P0.14	Inverter Error	Bit0: Inverter Error Bit1: Air compressor OH Bit2: Air compressor Over Pressure Bit3: Emergency stop Bit4: Fan status Bit5: phase sequence Error Bit6: Pressure sensor error(<2Ma)	RO

		Bit7: Motor OH Bit8: Motor Error Bit9: Communication Error Bit10:solenoid valve Bit11: ultralow water level error Bit12: drain away water Bit13: moisturizing Bit14: Changing the water Bit15: Input Error Alarm, but no stop	
P0.15	How long time air filter has been used	1hour	RO
P0.16	How long time oil filter has been used	1hour	RO
P0.17	How long time separator has been used	1hour	RO
P0.18	How long time lubricating oil has been used	1hour	RO
P0.19	How long time lubricating grease has been used	1hour	RO
P0.20	Power	0.1KW	RO
P0.21	Motor temperature	1℃（PT2+/PT2-）	RO
P0.22	Total running time	1hour	RO

P0.23	Total Loading time	1hour	RO
P0.24	Total unload time	1hour	RO
P0.25	Fan current	0.0A	RO
P0.26	electric quantity	1kwh	RO
P0.27	Fault code	Inverter Fault code	RO
P0.28	Inverter status	1：FWD 2：REV 3：Stop	RO
P0.32	Running timing .min	Running timing	RO
P0.34	How long time belt has been used	1hour	RO
P0.71	Loading time	Each 10min add 1	RO
P0.72	Unload time	Each 10min add 1	RO
P0.80	Analog input	0-100．0%	RO
P1 Group Basic parameter and motor parameter			
Code	Function	Range	Factory value
P1.00	Setting frequency by keypad	0~P1.05	00.00Hz
P1.01	Control mode	0:Vector control without PG card 1:V/F control	0
P1.02	Frequency given	0:KEY 1:FIC:4-20mA 2:RS485 communication	0
P1.03	Running mode	0: KEY	0

		1: I/O 2: Communication control	
P1.04	REV enabled	0:Forbid REV 1：Enable REV	0
P1.05	MAX Frequency	50.00Hz	50.00Hz
P1.06	Min Frequency	00.00Hz	00.00Hz
P1.07	Accelerate Time	Variation	30.00s
P1.08	Decelerate Time	Variation	30.00s
P1.09	Parking mode	0-Decelerate stop; 1-Coast stop	0
P1.12	Power coefficient	0~200.0%	100.0%
P1.13	Carrier	1.0-16.0k	Variation
P1.17	Factory reset	Factory reset=08	0
P1.18	Unlock parameter	0：Parameter unlock 1：Parameter locked	0
P1.19	Inverter Max frequency	Motor rated frequency~500.00hz	50Hz
Motor parameter			
P1.20	Motor type	0-Asynchronous；2-Synchronous	Refer to Motor
P1.21	Motor rated power	0.1~1000.0kW	Refer to Motor
P1.22	Motor rated voltage	0~690V	Refer to Motor
P1.23	Motor rated current	0.01~655.35A	Refer to Motor
P1.24	Motor rated frequency	0.00~500.00HZ	Refer to Motor
P1.25	Motor rated RPM	0~65536rpm	Refer to Motor
P1.26	Motor counter emf	0~380V	Refer to Motor
P1.30	Motor auto tuning	1: static 2: dynamic	0

P2 Group　Functional Input/Output			
P2.00	FIC Minimum input	0~F2.01	4.0mA
P2.01	FIC Maximum input	F2.01~20.0mA	20.0mA
P2.02	FIC Filter time	0-100.0S	2.5s
P2.10	S1 Function	0：　NO 17：Emergency stop 27：Motor over-hot protection 28：Fault input	17
P2.11	S2 Function		00
P2.12	S3 Function		00
P2.13	S4 Function		00
P2.14	S5 Function		00
P2.15	S6 Function		27
P216~P217	Reserve		
Functional Output ALL IN ONE Machine			
P2.19	L1,VN1	0：NO；1：Running；3：Fault；17:Oil pump open； 18:Motor fan open；30: Loading；31: Fan	30
P2.20	L2,VN2		31
P2.21 ~P2.29	Reserve		
F2.30	Fan switch mode	0:Auto；　1 open ；　2 close	0
F2.31	solenoid valve switch mode	0:Auto；　1 open ；　2 close	0
F2.32	Reserve		
F2.33	Fault control mode	0:Auto；　1 open ；　2 close	0
P5 Group Special parameter for Air compressor constant pressure control （Valid when set P6.00=1）			

P5.00	Frequency pressure	P5.02~P5.01	7.00kgf/cm2
P5.01	Unload pressure	P5.00~P5.03	8.00kgf/cm2
P5.02	Loading pressure	0~P5.00	6.50kgf/cm2
P5.03	Stop pressure	P5.01~30.00kgf/cm2	10.00kgf/cm2
P5.04	Pressure range	0.00~30.00kgf/cm2	16.00kgf/cm2
P5.05	Fan start temperature	Fan stop temperature~120.0C℃	80℃
P5.06	Fan stop temperature	0~Fan start temperature	70℃
P5.07	Stop temperature	Fan start temperature~180℃	100℃
P5.08	Start delay	0~100s	3s
P5.09	Loading delay	0~3000s	20s
P5.10	Unload delay	0~3000s	120s
P5.11	Reset delay	0~3000s	5s
P5.12	Stop delay	0~3000s	30s
P5.50	Motor temperature alarm threshold temperature	0~200℃	125℃
P6 Group			
P6.00	Air compressor constant pressure control mode valid	0- Invalid 1- Valid	0
P6.07	PID-P	0.0~200.0	100.0
P6.08	PID-I	0.0~200.0s	0.5s
P6.10	PID step length	0.00~10.00Hz	2.50Hz
P6.21	Pressure sensor off line inspection	0-Invalid 2-Valid（Off line current decided by P6.31）	0

P6.24	Frequency temperature	0.0~100.0s	70.0℃
P6.25	Fan frequency/Power frequency option	0- Power frequency 1- Frequency	Variation
P6.31	Pressure sensor off line inspection current standard	0.00~4.00mA	3.00mA
P8 Group Senior parameter			
P8.00	P8 group lock	0- Locked 1- Unlock	1
P8.14	Temperature adjust coefficient	0-200.0%	100%
P8.15	Inverter Type	0- Synchronous motor 1- Asynchronous motor	0

Fault Type	
H-OP	Over pressure alarm
H-OH	Over Heat alarm
NOTO	Motor over heat protection
ES	Emergency stop
CO	Communication fault (Inverter)
PHAS	phase sequence fault
NNA	Pressure sensor off line fault
djoH	Motor Over heat alarm
Frequency fault	Refer to NZ8000 Error code